(Air Force) T.O. 33A1-3-358-11
(Army) TM 11-6625-842-15
(Navy) NAVAIR 16-30APM239-2

TECHNICAL MANUAL

OPERATION AND SERVICE/ORGANIZATIONAL, GS AND DEPOT MAINTENANCE MANUAL WITH ILLUSTRATED PARTS BREAKDOWN

TEST SET, TRANSPONDER SET AN/APM-239A

Hazeltine Corporation
F33657-67-C-1319

This copy is a reprint which includes current pages from Changes 1 through 9.

Published under authority of the Secretaries of the Air Force, Army, and Navy.

"LIBRARIAN: CHECK FOLD-OUT PAGE FILING SEQUENCE"

1 APRIL 1968

AIR FORCE 4-29-69-3200-REPRINT

LIST OF EFFECTIVE PAGES

INSERT LATEST CHANGED PAGES. DESTROY SUPERSEDED PAGES.

NOTE: The portion of the text affected by the changes is indicated by a vertical line in the outer margins of the page. Changes to illustrations are indicated by miniature pointing hands. Changes to wiring diagrams are indicated by shaded areas.

Dates of issue for original and changed pages are:

Original	0	1 Apr 68	Change	4	15 Apr 71	Change	8	1 May 73
Change	1	15 Jan 70	Change	5	20 Sep 71	Change	9	23 Apr 76
Change	2	20 Aug 70	Change	6	1 Mar 72			
Change	3	15 Dec 70	Change	7	15 Nov 72			

TOTAL NUMBER OF PAGES IN THIS PUBLICATION IS 110 CONSISTING OF THE FOLLOWING:

Page No.	* Change No.
A	9
i	5
ii - iii	0
iv Blank	0
1-1	3
1-2 - 1-3	0
1-4 - 1-6	4
2-1 - 2-3	0
2-4 Blank	0
3-1 - 3-2	0
3-3	4
3-4- 3-5	0
3-6	6
3-7	0
3-8	6
3-9	0
3-10	6
3- 11	0
3-12 Blank	0
4-1	4
4-2	0
4-3	2
4-4	0
4-5	5
4-6	4
4-7	0
4-8	5
4-9 - 4-10	4
4-11 - 4-15	0
4-16	4
417	0
4-18	4
4-19	0
4-20 Blank	0
5-1- 5 -15	0
5-16	7
5-17 - 5-21	0
5-22 - 5-23	9
5-24 - 5-33	0
5-34	7
5-35	9
5-36	8
5-37	0
5-38 Blank	0
6-1 - 6-4	0
7-1 - 7-4	0
A-1	0
A-2 Blank	0
B-1 - B-8	0
C-1 - C-2	0
C-3 - C-5	5
C-6 Blank	0

Upon receipt of the second and subsequent changes to this technical order, librarians shall ascertain that all previous changes have been received and incorporated. Action should be taken promptly if the publication is incomplete.

*Zero in this column indicates an original page.

ADDITIONAL COPIES OF THIS PUBLICATION MAY BE OBTAINED BY USAF ACTIVITIES IN ACCORDANCE WITH T.O. 00-5-2.

USAF

TABLE OF CONTENTS

Section		Page
I	INTRODUCTION AND DESCRIPTION	1-1
	1-1 Scope	1-1
	1-3 Purpose of Equipment	1-1
	1-5 General Description	1-1
	1-7 Electrical and Mechanical Characteristics	1-1
	1-9 Equipment Supplied	1-1
	1-12 Index to Publications, Forms, and Records	1-6
	1-16 Forms and Records	1-6
II	PREPARATION FOR USE	2-1
	2-1 Scope	2-1
	2-3 Unpacking	2-1
	2-5 Siting	2-1
	2-7 Power Connector Assembly	2-1
	2-9 Front Panel Connectors	2-1
	2-11 Pre-Operational Checks	2-1
III	OPERATING INSTRUCTIONS	3-1
	3-1 Introduction	3-1
	3-3 Controls, Indicators and Connectors	3-1
	3-5 Multimeter ME-358/APM-239A	3-4
	3-7 IF Amplifier Extension Assembly	3-4
	3-9 Coaxial Adapters	3-4
	3-11 Extender Boards	3-4
	3-13 Cables	3-4
	3-15 Operating Procedure	3-7
	3-17 Preliminary Control Settings	3-7
	3-19 Interconnection Information	3-8
	3-25 Use of Extender Cables and Adapters	3-10
	3-27 Use of Extender Boards	3-10
	3-31 Energizing the Test Set	3-11
	3-33 De-Energizing Instructions	3-11
IV	MAINTENANCE INSTRUCTIONS	4-1
	4-1 Scope	4-1
	4-3 Functional Description	4-1
	4-4 General	4-1
	4-6 A-C and D-C Controls	4-1
	4-7 Power Supply Circuit	4-1
	4-8 A-C and D-C Voltmeter and Ammeter Circuits	4-1
	4-10 Reference Regulator,	4-1
	4-11 Mode C Encoder Simulator	4-3
	4-12 Mode 4 Reply Circuit	4-3
	4-13 Controls, Indicators, and Connectors	4-3
	4-15 Test Equipment Required	4-3
	4-17 Checkout Procedure	4-3
	4-19 Preventive Maintenance	4-4
	4-21 Calibration Checks	4-4
	4-23 Zeroing of Meters	4-4
	4-24 Fault Isolation Meter Check	4-5
	4-24A Fault Isolation Meter Check (Air Force)	4-5
	4-25 Voltmeter and Ammeter Check	4-5
	4-26 Troubleshooting	4-5
	4-27 General	4-5
	4-28 Visual Inspection	4-5
	4-29 Localization Procedures	4-6

TABLE OF CONTENTS (cont)

Section		Page
IV (cont)	4-30 Disassembly and Assembly	4-7
	4-31 Transponder Set Contra,	4-7
	4-32 Test Set Front Panel	4-7
	4-33 Fault Isolation Meter	4-7
	4-34 Component Removal	4-7
	4-35 Reassembly	4-7
	4-36 Schematic Diagrams	4-7
V	PARTS LIST	5-1
	5-1 Introduction	5-1
	5-4 Illustrations	5-1
	5-6 Parts Listing	5-1
	5-12 Numerical Index	5-1
	5-14 Provisioning Codes	5-1
	5-16 Air Force Source Codes and Definitions	5-1
	5-23 Navy Source Codes and Definitions	5-4
	5-31 How to Use This Parts List	5-6
	5-33 Vendor's Codes	5-6
VI	DEPOT OVERHAUL STANDARDS	6-1
	6-1 Introduction	6-1
	6-3 Applicable References	6-1
	6-7 Test Facilities Required	6-1
	6-9 General Test Requirements	6-1
	6-13 Tests	6-1
	6-20 Continuity Checks	6-5
	6-22 Accessory Cables	6-6
VII	SHIPMENT AND LIMITED STORAGE AND DEMOLITION TO PREVENT ENEMY USE	7-1
	7-1 Shipment and Limited Storage	7-1
	7-7 Demolition of Material to Prevent Enemy Use	7-1
Appendix A	REFERENCES	A-1/A-2
Appendix B	BASIC ISSUE ITEMS	B-1
	Section I Introduction	B-1
	B-1 General	B-1
	B-2 Explanation of Columns	B-1
	B-3 Federal Supply Codes	B-2
	Section II Basic Issue Items List	B-3
Appendix C	MAINTENANCE ALLOCATION	C-1
	Section I Introduction	C-1
	C-1 General	C-1
	C-2 Explanation of Format for Maintenance Allocation Chart	C-1
	C-3 Explanation of Format for Tool and Test Equipment Requirements	C-1
	Section II Maintenance Assignment	C-2

LIST OF ILLUSTRATIONS

Figure	Title	Page
1-1	Test Set, Transponder Set AN/APM-239A	1-2
1-2	Table of Specifications,	1-3
1-3	List of Equipment Supplied	1-4
1-4	List of Accessory Equipment.	1-4
2-1	Outline Dimensional Diagram.	2-2
3-1	Controls, Indicators and Connectors	3-1
3-2	Location of Controls, Indicators, and Connectors	3-5
3-3	Normal Meter Readings, Fault Isolation Meter	3-6
3-4	Coaxial Adapter Data	3-6
3-5	Cable Assembly Data	3-6
3-6	Preliminary Control Settings	3-8
3-7	Interconnection Diagram	3-9
3-8	Extender Board Data	3-10
4-1	Functional Block Diagram	4-2
4-2	Maintenance Chart	4-4
4-3	Trouble Shooting Chart	4-6
4-4	Test Set Schematic Diagram	4-8
4-5	Fault Isolation Meter, Schematic Diagram	4-9
4-6	Wire Run List, AN/APM-239A	4-10
5-1	Test Set Assembly	5-8
5-2	Transponder Set Test Set TS-2681/APM-239A.	5-12
5-3	Panel Assembly (Sheet 1 of 2)	5-13
5-3	Panel Assembly (Sheet 2 of 2)	5-14
5-4	Board Assembly	5-18
5-5	Multimeter, ME-358/APM-239A	5-19
5-6	Test Adapters, MX-8202/APM-239A, MX-8203/APM-239A, MX-8204/APM-239A, MX-8205/APM-239A, MX-8206/APM-239A, MX-8207/APM-239A	5-20
5-7	Circuit Card Assembly Extender Boards, MX-8141/APM-239A, MX-8142/APM-239A, MX-8143/APM-239A, MX-8144/APM-239A, MX-8145/APM-239A, MX-8146/APM-239A, MX-8147/APM-239A, MX-8148/APM-239A	5-21
5-8	Electrical Special Purpose Cable Assembly, CX-10905/APM-239A	5-22
5-9	Electrical Special Purpose Cable Assembly, CX-10906/AMP-239A	5-23
5-10	Power Electrical Cable Assembly, CX-10926/APM-239A	5-24
5-11	Electrical Special Purpose Cable Assemblies, CX-10921/APM-239A, CX-10923/APM-239A, CX-10925/APM-239A	5-25
5-12	Electrical Special Purpose Cable Assemblies, CX-10922/APM-239A, CX-11734/APM-239A, CX-11735/APM-239A	5-26
5-13	Radio Frequency Cable Assembly, CG-3491/APM-239A	5-27
5-14	Electrical Special Purpose Cable Assembly, CX-10924/APM-239A	5-28
5-15	Electrical Special Purpose Cable Assembly, CX-10908/APM-239A	5-29
5-16	Electrical Special Purpose Cable Assemblies, CX-10909/APM-239A, CX-10911/APM-239A, CX-10912/APM-239A	5-30
5-17	Electrical Special Purpose Cable Assembly, CX-10907/APM-239A	5-31
5-18	Electrical Special Purpose Cable Assembly, CX-10910/APM-239A	5-32
5-19	Electrical Special Purpose Cable Assembly, CG-3470/APM-239A	5-33
6-1	Test Fixture	6-2
6-2	Initial Control Settings	6-3
7-1	Materials Required for Packaging	7-1

SECTION I

INTRODUCTION AND DESCRIPTION

1-1. SCOPE.

1-2. This technical manual contains descriptive and preparation-for-use information, operating instructions, maintenance instructions, depot overhaul standards, and a parts list for Test Set, Transponder Set AN/APM-239A (figure 1-1). The equipment is manufactured by Hazeltine Corporation, Little Neck, New York.

1-3. PURPOSE OF EQUIPMENT.

1-4. Test Set, Transponder Set AN/APM-239A, herein referred to as the over-all test set, is a portable test set designed for the maintenance support of the following equipments:

Receiver-Transmitter RT-727/APX-64
Receiver-Transmitter RT-728/APX-64
Receiver-Transmitter RT-731/APX-64
Receiver-Transmitter RT-774/APX-68
Receiver-Transmitter RT-859/APX-72
Receiver-Transmitter RT-494/APX-44
Transponder Test Set TS-1843/APX
Transponder Computer KIT-1A/TSEC
Altitude Encoder TRU-73/A
Altitude Encoder CPU-66/A
Altitude Encoder CPU-46/A
Transponder Set Control C-2714/APX-44

NOTE

Transponder Set Control C-6280(P)/APX or C-6280A(P)/APX, supplied as part of the over-all test set, is supplied as GFP (Government Furnished Property).

The over-all test set provides power to the equipment under test and provides the means for interconnecting the various units of a transponder set for the purpose of bench testing and adjusting. The over-all test set essentially simulates the wiring harness in the aircraft.

1-5. GENERAL DESCRIPTION.

1-6. The test set and associated accesories are contained in a transit case (figure 1-1) which is a lightweight, portable, aluminum case. The test set is removed from the transit case and is suitable to permit use of the set when placed on a work bench along with associated test equipment and units to be tested. All controls, switches, connectors, and indicators are located on the front panel of the test set. In addition to the test set itself, the transit case has provision for the fault isolation meter, 15 extender boards, accessory and power cables, coaxial adaptors, special tools and the technical manual.

1-7. ELECTRICAL AND MECHANICAL CHARACTERISTICS.

1-8. A list of the electrical and mechanical characteristics is given in figure 1-2.

1-9. EQUIPMENT SUPPLIED.

1-10. A list of the equipment supplied as the over-all test set (excluding accessories) is given in figure 1-3 and illustrated in figure 1-1.

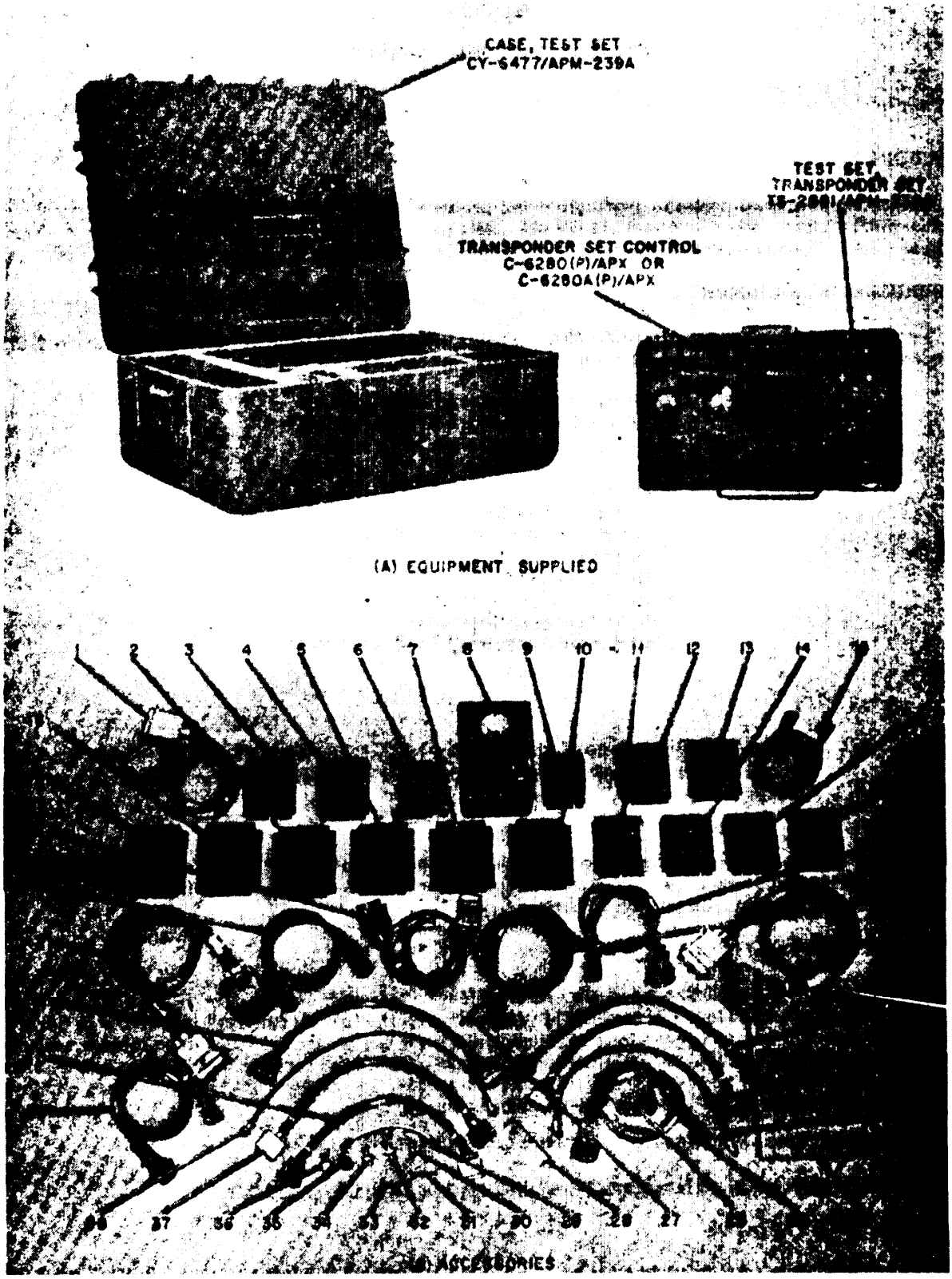

Figure 1-1. Test Set, Transponder Set AN/APM-239A

Nomenclature	Test Set, Transponder Set AN/APM-239A
Weight (excluding accessories)	88 pounds
Over-all Dimensions of Transit Case:	
Height	13.37 inches
Width	26 inches
Length	33.625 inches
Over-all Dimensions of Test Set:	
Length	22.5 inches
Width	14.2 inches
Depth	8.25 inches
Input Power:	
voltage	115 volts ac ± 10%
Frequency	400 Hz ± 20%
Phase	
Power Consumption	700 watts maximum when supplying power to all of the units of a transponder set
Connections Provided:	
	TRANSPONDER (Receiver-Transmitter) J2
	MODE 4 COMPUTER J4
	MODE C ENCODER J5
	TRANSPONDER TEST SET J3
	TRANSPONDER SET CONTROL P1
	TEST MODULE OF RECEIVER-TRANSMITTER (Provided by Fault Isolation Meter)
Outputs:	
	28 volts dc, 10 amps max.
	115 volts ac, 2 amps max
	Mode 4 Reply (limited to 5 volts when applied from J4)
	Simulated Mode C Code (1.5 or 20 volts depending on switch position - in VOLTS condition only)

Figure 1-2. Table of Specifications

QTY	NAME	MANUFACTURER'S PART NO.
1	Case, Test Set CY-6477/ APM-239A (Transit Case)	Hazeltine No. 360087-1 or Sentinel No. 239E0038
1	Test Set, Transponder Set TS-2681/APM-239A (Test Set)	Hazeltine No. 119066-1 or Sentinel No. 239D0057
1	Transponder Set Control C-6280(P)/APX or C-6280A(P)/ APX (Set Control)	(GFP)

Figure 1-3. List of Equipment Supplied (Excluding Accessories)

1-11. In addition to the equipment listed in figure 1-3, accessories are provided for the Air Force, for the Navy, and for the Army to test the particular transponder set configurations used by each of the services. Figure 1-4 lists the accessories supplied to each service.

NAME AND TYPE DESIGNATION	COMMON NAME	REF DESIG	USAGE AND QTY			INDEX NO. (FIG. 1-1)
			USAF	USN	USA	
Multimeter ME-358/APM-239A	Fault isolation meter	-	1	1	-	8
IF Amplifier Extender Frame Assembly (Hazeltine part no. 119142-1 or Sentinel No. 239C0030)	IF amplifier extender frame assembly	-	1	1	-	6
Adapter, Test MX-8203/APM-239A	Extender board A1	A1	1	1	1	45
Adapter, Test MX-8207/APM-239A	Extender board A2	A2	1	1	1	46
Adapter, Test MX-8202/APM-239A	Extender board A3	A3	1	1	1	2
Adapter, Test MX-8205/APM-239A	Extender board A4	A4	1	1	1	5
Adapter, Test MX-8206/APM-239A	Extender board A5	A5	1	1	1	7
Adapter, Test MX-8204/APM-239A	Extender board A6	A6	1	1	1	10
Extender Board, Circuit Card Assembly MX-8140/APM-239A	Extender board A7	A7	1	1	-	9
Extender Board, Circuit Card Assembly MX-8141/APM-239A	Extender board A8	A8	1	1	-	11
Extender Board, Circuit Card Assembly MX-8142/APM-239A	Extender board A9	A9	1	1	1	14
Extender Board, Circuit Card Assembly MX-8143/APM-239A	Extender board A10	A10	1	1	-	16
Extender Board, Circuit Card Assembly MX-8144/APM-239A	Extender board A11	A11	1	1	1	17
Extender Board, Circuit Card Assembly MX-8145/APM-239A	Extender board A12	A12	1	1	-	12
Extender Board, Circuit Board Assembly MX-8146/APM-239A	Extender board A13	A13	1	1	-	13

Figure 1-4. List of Accessory Equipment (Sheet 1 of 3)

NAME AND TYPE DESIGNATION	COMMON NAME	REF DESIG	USAGE AND QTY			INDEX NO. (FIG. 1-1)
			USAF	USN	USA	
Extender Board, Circuit Card Assembly MX-8147/APM-239A	Extender board A14	A14	1	1	-	3
Extender Board, Circuit Card Assembly MX-8148/APM-239A	Extender board A15	A15	1	1	-	4
Adapter, Connector UG-201/U	N to BNC adapter	-	1	1	1	35
Adapter, Connector UG-636A/U	C to BNC adapter	-	1	-	1	34
Adapter, Connector UG-643/U	Modified C to C adapter	-	1	1	-	32
Adapter, Connector UG-309/U	HN to BNC adapter	-	1	-	-	36
Adapter, Connector (Hazeltine part no. 350888-1 or Sentinel No. 239C0088)	Special connector to BNC adapter	-	1	-	-	30
Cable Assembly, Special Purpose, Electrical CX-10905/APM-239A	Cable W1	W1	1	1	1	20
Cable Assembly, Special Purpose Electrical CX-10906/APM-239A	Cable W2	W2	1	-	-	42
Cable Assembly, Power, Electrical CX-10926/APM-239A	Cable W3	W3	1	1	1	19
Cable Assembly, Special Purpose, Electrical CX-10921/APM-239A	Cable W4	W4	1	1	-	37
Cable Assembly, Special Purpose, Electrical CX-10922/APM-239A	Cable W6	W6	1	1	-	22
Cable Assembly, Special Purpose Electrical CX-10923/APM-239A	Cable W7	W7	1	1	-	23
Cable Assembly, Radio Frequency CG-3491/APM-239A	Cable W8	W8	2	2	-	38
Cable Assembly, Special Purpose Electrical CX-10924/APM-239A	Cable W9	W9	1	1	-	15
Cable Assembly, Special Purpose, Electrical CX-10925/APM-239A	Cable W10	W10	1	1	-	21
Cable Assembly, Special Purpose, Electrical CX-10908/APM-239A	Cable W11	W11	1	1	1	44
Cable Assembly, Special Purpose, Electrical CX-10909/APM-239A	Cable W12	W12	1	1	1	43
Cable Assembly, Special Purpose, Electrical CX-10907/APM-239A	Cable W13	W13	-	-	1	1
Cable Assembly, Special Purpose, Electrical CX-10910/APM-239A	Cable W14	W14	-	-	1	39
Cable Assembly, Special Purpose, Electrical CX-10911/APM-239A	Cable W15	W15	1	1	-	25
Cable Assembly, Special Purpose, Electrical CX-10912/APM-239A	Cable W16	W16	1	1	-	18

Figure 1-4. List of Accessory Equipment (Sheet 2 of 3)

NAME AND TYPE DESIGNATION	COMMON NAME	REF DESIG	USAGE AND QTY			INDEX NO. (FIG. 1-1)
			USAF	USN	USA	
Cable Assembly, Radio Frequency CG-3470/APM-239A	Cable W17	W17	1	1	1	29
Cable Assembly, Special Purpose, Electrical CX-11734/APM-239A	Cable W18	W18	1	1	1	41
Cable Assembly, Special, Test, Electrical CX-11735/APM-239A	Cable W19	W19	1	1	1	40
Shorting Connector (Hazeltine part no. 119145-1 or Sentinel No. 239B0054)	Shorting connector	-	1	1	1	26
Socket Key (Hazeltine part no. 880000-03 or Sentinel No. 239S0240-1)	Socket key (small)	-	1	1	1	31
Socket Key (Hazeltine part no. 880000-04 or Sentinel No. 239S0240-2)	Socket key (large)	-	1	1	1	33
Connector Removal Tool (Hazeltine part no. 880177 or Sentinel No. 239B0035)	Removal tool	-	1	1	1	27
Board Puller (Hazeltine part no. 880007 or Sentinel No. 239A0034)	Board puller	-	1	1	1	28
Technical Manual T.O. 33A1-3-358-11/ NAVAIR 16-30APM239-2/TM 11-6625-842-15	Technical manual	-	2	2	2	24

Figure 1-4. List of Accessory Equipment (Sheet 3 of 3)

1-12. INDEX OF PUBLICATIONS, FORMS, AND RECORDS.

1-13. INDEX OF EQUIPMENT PUBLICATIONS.

1-14. Refer to the latest issue of DA Pam 310-4 (Army), NAVSUP 2002 Section VIII (Navy), or T.O. 0-1-12 (Air Force) to determine whether there are new editions, changes or additional publications pertaining to the equipment.

1-15. Refer to DA Pam 310-7 (Army) to determine whether there are Modification Work Orders (MWO's) pertaining to the equipment.

1-16. FORMS AND RECORDS.

1-17. REPORTS OF MAINTENANCE AND UNSATISFACTORY EQUIPMENT. Use equipment forms and records in accordance with instructions in TM 38-750 (Army), NAVWEPS Form 13070/5 (Navy), or AFTO Form 29/29A (Air Force).

1-18. REPORT OF PACKAGING AND HANDLING DEFICIENCIES. Fill out and forward DD Form 6 (Report of Packaging and Handling Deficiencies) as prescribed in AR 700-58 (Army), NAVSUP Publication 378 (Navy), AFR 71-4 (Air Force), or MCO P4610-5 (Marine Corps).

1-19. DISCREPANCY IN SHIPMENT REPORTS (DISREP) (SF 361). Fill out and forward Discrepancy in Shipment Report (DISREP) (SF361) as prescribed in AR 55-38 (Army), NAVSUP Pub 459 (Navy), AFM 75-34 (Air Force), or MCO P4610.19 (Marine Corps).

1-20. REPORTING OF EQUIPMENT MANUAL IMPROVEMENTS. Reporting of errors, omissions and recommendations for improving this publication by the individual user is encouraged. Reports should be submitted on DA Form 2028 (Army), NAVWEPS Form 13070/5 (Navy), or AFTO Form 22 (Air Force). DA Form 2028 will be forwarded direct to Commanding General, U.S. Army Electronics Command, ATTN: AMSEL-ME-NMP-AD, Fort Monmouth, New Jersey 07703.

SECTION II

PREPARATION FOR USE

2-1. SCOPE.

2-2. This section contains the information required for unpacking, inspecting, and siting the test set. Information concerning power considerations and pre-operational checkout procedures is also provided.

2-3. UNPACKING.

2-4. No special instructions are required to remove the test set transit case from its shipping container, other than the usual precautions for unpacking delicate electronic equipment. After the transit case is unpacked, the cover should be operated and a visual inspection should be made to ensure that no shipping damage has occurred such as broken switches or controls, or loose panel connectors. A check should be made for completeness of equipment using the enclosed packing list and the information contained in figures 1-3 and 1-4. Refer to the USAGE AND QTY columns of figure 1-4 to determine the quantities of accessory items provided with each over-all test set.

2-5. SITING.

2-6. The test set is designed for use on a work bench, together with components of the transponder set under test and other required simulators and test equipment. Space requirements can be determined from figures 1-2 and 2-1. Arrange the test set and other required equipment to permit ease of access to controls and connectors. Since all of the controls, indicators, and connectors are accessible from the front panel, no special clearance arrangements are required at the rear or sides of the test set case.

2-7. POWER CONNECTOR ASSEMBLY.

2-8. Power cable W3, as shipped with the test set, requires the addition of a power connector which will mate with the particular type of 115-volt, 400-Hz power outlet available at the site where the equipment is to be used. See figure 1-2 for input power requirements.

WARNING

Use care when working on the 115-volt a-c line connections. Serious injury or loss of life may result from contact with this voltage. When making connections to cable W3, be sure that the white wire (No. 3) is grounded to eliminate a possible shock hazard.

Make connections to cable W3 as follows:

Wire	Color	Connection
1	Red	115 volts ac
2	Black	Ac return
3	White	Ground

2-9. FRONT PANEL CONNECTORS.

2-10. A list of front panel input and output signal connectors is provided in figure 3-1.

2-11. PRE-OPERATIONAL CHECKS.

2-12. Before attempting to operate the test set with the equipment to be tested, the following pre-operational checks should be performed.

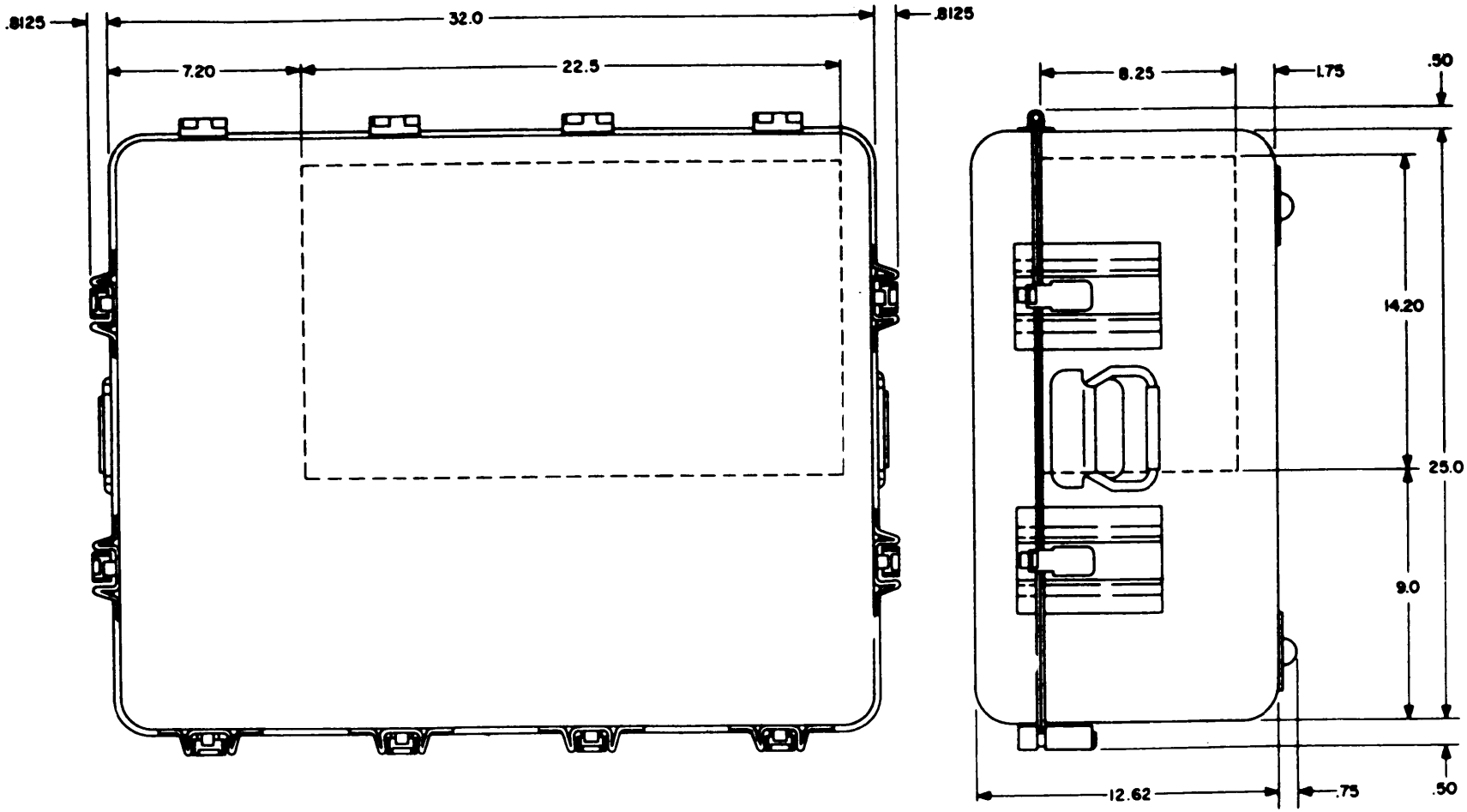

Figure 2-1. Outline Dimensional Diagram

NOTE

The operator should be thoroughly familiar with the test set before starting any checks or tests. A review of Section III of this manual, particularly with regard to caution notices and to the location and function of the various operating controls, indicators and connectors, should be accomplished before proceeding.

NOTE

See figure 3-2 for the locations of all controls, indicators, and connectors. Numbers in parentheses refer to the index numbers on figure 3-2.

a. Check that the test set is grounded.

b. Place the 6 AMP POWER circuit breaker (1) to the OFF (down) position, and rotate the AC CONTROL (42) and the DC CONTROL (43) to the extreme counterclockwise positions.

c. Connect power cable W3 between the 115-volt a-c power source and the POWER INPUT connector (41).

d. Place the 6 AMP POWER circuit breaker (1) in the ON position.

e. Place the METER SELECT switch (45) in the AC position.

f. Slowly rotate the AC CONTROL (42) fully clockwise. The voltmeter (44) should read 120 volts or higher and the POWER ON indicator lamp (3) should light.

g. Slowly rotate the AC CONTROL (42) counterclockwise to obtain an indication of 115 volts on the voltmeter (44).

h. Place the METER SELECT switch (45) in the DC position.

i. Slowly rotate the DC CONTROL (43) fully clockwise. The voltmeter (44) should read 35 volts minimum.

j. Slowly rotate the DC CONTROL (43) counterclockwise to obtain the required d-c voltage as indicated on the voltmeter (44).

k. Place the 6 AMP POWER circuit breaker (1) to the OFF position.

SECTION III

OPERATING INSTRUCTIONS

3-1. INTRODUCTION.

3-2. This section contains information and procedures required for personnel cooperate the test set. Included in the section is a list of controls, indicators, and connectors; descriptions of how auxiliary and accessory equipments are to be used; starting and stopping instructions; and operating procedures.

3-3. CONTROLS, INDICATORS AND CONNECTORS.

3-4. A list of the controls, indicators, and connectors located on the front panel of the test set is contained in figure 3-1. The information contained in figure 3-1 is keyed to figure 3-2, which illustrates the controls, indicators, and connectors as they appear on the front panel. Figure 3-1 also contains the reference designation and a brief description of the function performed by each control, indicator, and connector.

INDEX NO. (FIG. 3-2)	PANEL NOMENCLATURE	REF DESIG	FUNCTION
1	6 AMP POWER circuit breaker	CB1	Circuit breaker applies 115 volts ac to the test set and to the equipment under test.
2	10 AMP DC fuse	F2	Protects the 28-volt d-c power supply.
3	POWER ON indicator	DS1	White lamp lights to indicate that the test set is energized.
4	1/2 AMP DC fuse	F3	Provides overload protection for the 28-volt d-c output to TRANSPONDER connector J2.
5	SWITCHED AC POWER indicator	DS2	Red lamp lights to indicate that the power relay in the receiver-transmitter is energized and that the 115-volt a-c switched output of the receiver-transmitter is available.
6	2 AMP AC fuse	F1	Protects the 115-volt a-c output line.
7	PANEL LIGHTS switch	S1	Normally in the OFF position. When used with Transponder Set Control C-6280(P)/APX or C-6280A(P)/APX which has 28-volt lighting, it is placed in the 28V position to energize the panel lights of the set control when required; when used with a Transponder Set Control C-6280(P)/APX or C-6280A(P)/APX which has 6-volt lighting, it is placed in the 6V position to energize the panel lights of the set control when required. CAUTION Do not place the PANEL LIGHTS switch in the 28V position when operating with Transponder Set Control C-6280(P)/APX or 6280A(P)/APX which has 6-volt lighting.

Figure 3-1. Controls, Indicators, and Connectors (Sheet 1 of 4)

INDEX NO. (FIG. 3-2)	PANEL NOMENCLATURE	REF DESIG	FUNCTION
	MODE C ENCODER SIMULATOR switches		
8	C1	S11	Eleven two-position toggle switches simulate a Mode C reply code by providing an ON or an OFF condition to the various Mode C code control leads in the receiver-transmitter when jumper plug P5 is connected to MODE C ENCODER jack J5. The control condition electrical characteristic may be either a low impedance voltage or a resistance, as selected by the TEST CONDITION switch.
9	A1	S5	
10	C2	S8	
11	A2	S9	
12	C4	S3	
13	A4	S7	
14	B1	S4	
15	B2	S10	
16	D2	S12	
17	B4	S2	
19	D4 IDENT	S6	
18	CAUTION indicator	DS3	Amber lamp lights to indicate that the Mode 4 monitor of the receiver-transmitter has generated a caution light enable signal.
20	SUPPRESSION IN connector	J6	BNC connector for applying an externally generated suppression pulse to the receiver-transmitter.
21	SUPPRESSION OUT connector	J7	BNC connector for observing the suppression pulse output of the receiver-transmitter.
22	TEST CONDITION switch	S13	Two-position rotary switch selects means of controlling simulated Mode C code, i.e., a voltage (VOLTS position) or an impedance (OHMS position).
23	ALTITUDE DIGITIZER switch	S14	Provides necessary connection to TS-1843/APX when in OUT position.
24	AUX TRIG IN connector	J8	BNC connector for applying an externally generated auxiliary trigger to the receiver-transmitter.
25	MODE 4 ENABLE TRIG connector	J13	BNC connector for observing the Mode 4 enabling trigger output of the receiver-transmitters under test.
26	MODE 4 AUDIO connector	J10	BNC connector for access to the audio output of the receiver-transmitters under test.
27	MODE 4 AUDIO COMMON connector	J11	BNC connector for access to the audio output return of the receiver-transmitters under test.
28	LDG GR switch	S18	Two-position toggle switch simulates aircraft landing gear interlock switch during testing.
29	MODE 4 DISPARITY connector	J12	BNC connector for applying an externally simulated disparity trigger pulse to the receiver-transmitter, or for observing the disparity pulse generated by the Transponder Computer.
30	DISPARITY-INTERRUPT switch	S16	Two-position toggle switch normally in the up (DISPARITY) position. When placed in the INTERRUPT position, interrupts the disparity trigger pulse input to the receiver-transmitter from the transponder computer or from a computer simulator (AN/APM-245).

Figure 3-1. Controls, Indicator, and Connectors (Sheet 2 of 4)

INDEX NO. (FIG. 3-2)	PANEL NOMENCLATURE	REF DESIG	FUNCTION
31	ZEROIZE switch	S19	Three-position toggle switch normally in the NORM position. This position connects the Mode 4 zero code line from the transponder computer to the transponder. When placed in the ZEROIZE position, it applies a ground to the receiver-transmitter simulating a zeroize code input from the transponder computer. This will cause the CAUTION lamp on the test set front panel to light when the receiver-transmitter is operating properly. When placed in the OFF position, disconnects the Mode 4 zero code from the transponder.
32	MODE 4 INTERROG connector	J14	BNC connector for observing the Mode 4 receiver video output of the receiver-transmitter.
33	MODE 4 REPLY connector	J9	BNC connector for monitoring the reply pulses generated by the transponder computer.
34	REPLY-INTERRUPT switch	S17	Provides the capability of interrupting the Mode 4 reply from the transponder computer or Simulator Test Set AN/APM-245 to the receiver-transmitter.
35	X PULSE switch	S15	When in the X-PULSE position, provides a ground signal to the transponder (only for AN/APX-72) to enable the X-pulse generator. When in the CAUTION LIGHT RESET position, applies the caution light reset signal from the transponder set control to the transponder (AN/APX-68 only). For all other transponders normally left in OFF position.
36	POWER MODE switch	S20	Normally in AC/DC position, applies 28 volts dc via the 1/2 AMP DC fuse to the transponder. When in DC ONLY position the 1/2 AMP DC fuse is removed from the circuit, leaving a 10 amp fuse in the d-c line. In addition, the switch provides a shield-to-wire short and breaks 115V AC line, to enable RT-859/APX-72 to operate on dc only.
37	TRANSPONDER connector	J2	Jack for connecting cable between the test set and the receiver-transmitter to be tested.
38	MODE C ENCODER connector	J5	Jack for connecting jumper plug P5 when using the test set as a Mode C encoder simulator. The jack is also available for connecting a cable between the test set and external altitude encoders TRU-73/A, CPU-66/A, and CPU-46/A.
39	MODE 4 COMPUTER connector	J4	Jack available for connecting a cable between the test set and Transponder Computer KIT-1A/TSEC or Simulator Test Set AN/APM-245.
40	TRANSPONDER TEST SET connector	J3	Jack available for connecting a cable between the test set and Transponder Set Test Set TS-1843/APX.
41	POWER INPUT connector	J1	Jack for connecting input power cable to the test set.

Figure 3-1. Controls, Indicators, and Connectors (Sheet 3 of 4)

INDEX NO. (FIG. 3-2)	PANEL NOMENCLATURE	REF DESIG	FUNCTION
42	AC CONTROL	T1	Autotransformer adjusts a-c voltage supplied to the equipment under test.
43	DC CONTROL	T2	Autotransformer adjusts d-c voltage supplied to the test set and the equipment under test.
44	VOLTMETER (No panel nomenclature)	M1	Measures a-c (0-150 volts) or d-c (0-50 volts) voltage supplied by test set power supply circuit.
45	METER SELECT switch	S21	Selects whether a-c or d-c power is to be measured by ammeter and voltmeter.
46	AMMETER (No panel nomenclature)	M2	Measures a-c (0-2 amps) or d-c (0-10 amps) current supplied by test set power supply circuit.
47	TRANSPONDER SET CONTROL connector (GFP set control removed)	P1	Plug for connecting the test set wiring harness with the set control.

Figure 3-1. Controls, Indicators, and Connectors (Sheet 4 of 4)

3-5. MULTIMETER ME-358/APM-239A.

3-6. Multimeter ME-358/APM-239A (fault isolation meter) is used in conjunction with cable W9 to select and measure significant receiver-transmitter voltages and the crystal mixer current when connected to the test module of the receiver-transmitter of Transponder Set AN/APX-64 only. In addition, any of four video signals available in the test module may be selected for monitoring at the fault isolation meter BNC connector. The schematic diagram of the fault isolation meter is shown in figure 4-5. A chart showing the meter readings to be expected for each position of the fault isolation meter selector switch when the receiver-transmitter is operating properly is provided in figure 3-3.

3-7. IF AMPLIFIER EXTENSION ASSEMBLY.

3-8. The IF amplifier extender frame assembly consists of an aluminum frame and an integral cable assembly. Plug P1 of the cable mates with the IF Amplifier Module jack on the receiver-transmitter chassis, and plug P2 mates with plug P201 of IF Amplifier Module AM-4359/APX-64, while the frame provides mechanical support to extend the module beyond the receiver-transmitter for ease of access in trouble shooting and testing.

3-9. COAXIAL ADAPTERS.

3-10. Five coaxial adapters are provided to adapt the various series coaxial connectors found on receiver-transmitters to standard Series BNC, to facilitate use with associated test equipment. A tabular listing of all coaxial adapters, giving type and application, is provided in figure 3-4.

3-11. EXTENDER BOARDS.

3-12. Fifteen extender boards are provided to facilitate maintenance of the printed circuit boards of the receiver-transmitter modules. These extender boards fulfill the same function for the printed circuit boards as does the IF Amplifier Extender Frame for the IF Amplifier Module. Since the receiver-transmitter chassis receptacles for the printed boards use key pins to prevent improper insertion of the receiver-transmitter modules, the properly keyed extender board must be used during trouble shooting and testing. Each of the extender boards is marked to indicate the particular printed board with which it is to be used.

3-13. CABLES.

3-14. Various cables are provides to interconnect the components listed in paragraph 1-4 and to permit test bench operation with certain modules removed from their mountings on the receiver-transmitter APX-64 or -72 chassis only. A tabular listing of the various cables and their function is provided in figure 3-5,

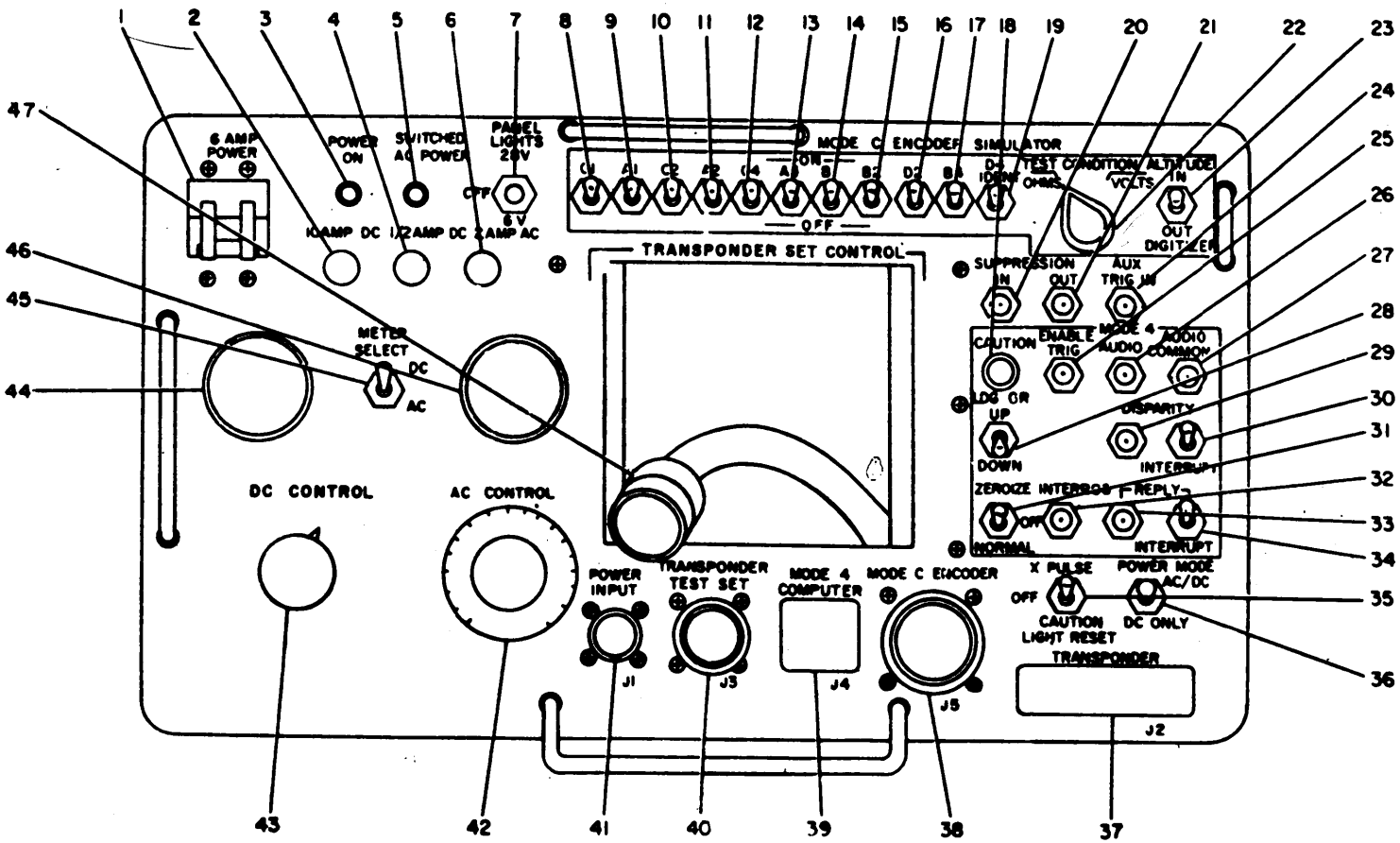

Figure 3-2. Location of Controls, Indicators, and Connectors

SWITCH POSITION	METER READING
MOD BIAS (25 VDC)	22.8 to 27.2 volts dc
+20 VDC	17 to 23 volts dc
+6 VDC	4.7 to 7.3 volts dc
+4 VDC	3.5 to 4.5 volts dc
H. V. SAMPLE (3 to 3.5 VDC)	3 to 3.5 volts dc
-6 VDC	4.7 to 7.3 volts dc
-20 VDC	17 to 23 volts dc
6.3 VAC	5.3 to 7.3 volts ac
XTAL CURR MA DC	0.4 to 1.4 ma. dc

Figure 3-3. Normal Meter Readings, Fault Isolation Meter

TYPE	APPLICATION
UG-201/U	Adapts Series N antenna connector of Receiver-Transmitter RT-727/APX-64, and RT-859/APX-72 to Series BNC connector.
UG-643/U	Adapts Modified Series C antenna connector of Receiver-Transmitter RT-728/APX-64, to Series C connector.
UG-636A/U	Adapts UG-643/U to Series BNC connector for the RT-728/APX-64. Used to adapt Series C antenna connector on RT-744/APX-68, and RT-494/APX-44 to Series BNC connector.
UG-309/U	Adapts Series HN antenna connector of Receiver-Transmitter RT-731/APX-64, to Series BNC connector.
Special Connector to (Hazeltine 350888-1 or Sentinel 239C0088)	Adapts auxiliary trigger connector on RT-731/APX-64 to Series BNC connector.

Figure 3-4. Coaxial Adapter Data

CABLE ASSEMBLY	FUNCTION
W1	Connects test set to Receiver-Transmitters RT-727/APX-64, RT-728/APX-64, RT-774/APX-68, or RT-859/APX-72.
W2	Connects test set to Receiver-Transmitter RT-731/APX-64.
W3	Connects test set to power source.
W4	Connects Power Supply Module P-4380/APX-64 to its receptacle on the receiver-transmitter chassis.

Figure 3-5. Cable Assembly Data (Sheet 1 of 2)

CABLE ASSEMBLY	FUNCTION
W6	Connects multipin connector of Radio Frequency Module RF-188/APX-64 to its multipin receptacle on the receiver-transmitter chassis. (See also cable W8.)
W7	Connects multipin connector of Transmitter Module T-1000/APX-64 to its multipin receptacle on the receiver-transmitter chassis. (See also cable W8.)
W8	Two cables W8 are used to connect the two coaxial connectors of the radio frequency module to the two mating receptacles on the receiver-transmitter chassis. (See cable W6 for rf module multipin connector connection.) One Cable W8 is used to connect the coaxial connector of the transmitter module to its mating receptacle on the receiver-transmitter chassis. (See cable W7 for transmitter module multipin connector connection.)
W9	Connects fault isolation meter to the multipin connector of Test Module TS-2285/APX-64.
W10	Connects Delay Line MX-6939/APX-64 to its receptacle on the receiver-transmitter chassis.
W11	Connects test set to Transponder Computer KIT-1A/TSEC.
W12	Connects test set to Transponder Test Set TS-1843/APX.
W13	Connects test set to Receiver-Transmitter RT-494/APX-44.
W14	Connects test set to Transponder Control C-2714/APX-44.
W15	Connects the test set to Altitude Encoder CPU-66/A or TRU-73/A.
W16	Connects the test set to Altitude Encoder CPU-46/A.
W17	Video jumper for RT-859/APX-72 (internal to APX-72).
W18	RF section jumper for RT-859/APX-72.
W19	Power supply jumper for RT-859/APX-72.

Figure 3-5. Cable Assembly Data (Sheet 2 of 2)

3-15. OPERATING PROCEDURE.

3-16. Paragraphs 3-17 through 3-34 describe the basic procedures to be followed in making preliminary control settings and interconnections, and energizing and de-energizing the test set.

NOTE

Before attempting to operate the test set, perform the pre-operational checks described in paragraph 2-11.

3-17. PRELIMINARY CONTROL SETTINGS.

3-18. The test set may be used to interconnect and facilitate servicing of the components of various IFF transponder systems as illustrated in figure 3-7. The preliminary control settings are the same for all configurations. Before starting operation, check the setting of the operating controls and reset as necessary. Set the controls on the test set in accordance with figure 3-6.

CONTROL	POSITION
PANEL LIGHTS	OFF
X PULSE	OFF
ZEROIZE	NORMAL
DISPARITY	DISPARITY
REPLY	REPLY
6 AMP POWER	OFF
C1	ON
A1	ON
C2	ON
A2	ON
C4	ON
A4	ON
B1	ON
B2	ON
D2	ON
B4	ON
D4/IDENT	ON
TEST CONDITION	OHMS
LDG GR	DOWN
POWER MODE	AC/DC - For all AN/APX-64's DC ONLY - For RT-859/APX-72, AN/APX-68, AN/APX-44 NOTE When this switch is set to DC only for RT-859/APX-72, AC Control (42, figure 3-2) should be set fully counter clockwise.
ALTITUDE DIGITIZER	IN if altitude encoder is connected, otherwise OUT

Figure 3-6. Preliminary Control Settings

3-19. INTERCONNECTION INFORMATION.

3-20. The interconnection diagram for the test set is shown in figure 3-7.

3-21. Cables are provided for the purpose of interconnecting the test set to the equipments of the IFF transponder set. Select the proper cables to be used in accordance with figure 3-7.

3-22. Connect P1 of the appropriate cycle to TRANSPONDER connector J2 of the test set, and connect P2 to the multipin connector on the receiver-transmitter.

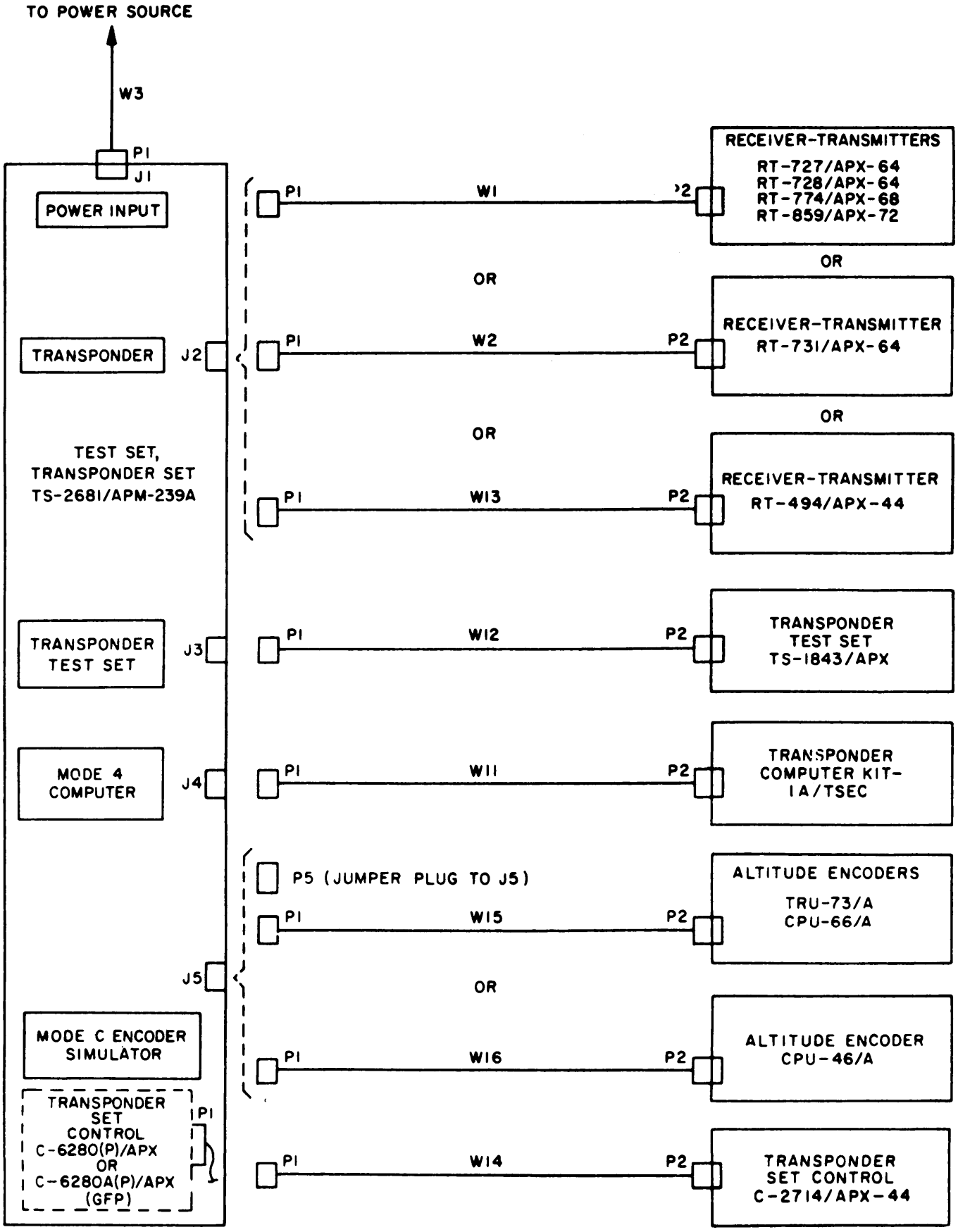

Figure 3-7. Interconnection Diagram

3-23. Connection and mounting provisions exist on the front panel of the test set for Transponder Set Control C-6280(P)/APX or C-6280A(P)/APX (supplied and installed with the test set as GFP). If the C-6280(P)/APX or C-6280A(P)/APX is out, reach through the cutout in the front panel and draw out the internal cable. Bring the C-6280(P)/APX or C-6280A(P)/APX near enough to the front panel to connect P1 of the cable to J201 of Transponder Set Control C-6280(P)/APX or 6280A(P)/APX. Locate the transponder set control in the cutout on the panel and secure the turnlock fasteners. For Receiver-Transmitter RT-494/APX-44 only, use cable W14 to connect Transponder Set Control C-2714/APX-44 to plug P1. In this case, the C-2714/APX-44 is placed on the bench.

3-24. Under normal conditions, the Mode C encoder simulator circuitry of the test set is used during testing of receiver-transmitters of transponder sets. Check that jumper plug P5 is properly seated in J5, MODE C ENCODER, before starting tests. Jumper plug P5 is not utilized when using the test set in conjunction with an actual altitude encoder. In this case, cable W15 is used to connect Altitude Encoder TRU-73/A or CPU-66/A to connector J5, or cable W16 is used to connect Altitude Encoder CPU-46/A to connector J5. Transponder Test Set TS-1843/APX and Transponder Computer KIT-1A/TSEC are connected to connectors J3 and J4, respectively.

3-25. USE OF EXTENDER CABLES AND ADAPTERS.

3-26. Paragraphs 3-5 through 3-14 describe the various accessory items. When using the extender cables or coaxial adapters be sure that the proper mating terminations are used. Dc not force the connection or exert bending or twisting stresses. Be sure that the connectors and adapters are fully seated.

3-27. USE OF EXTENDER BOARDS.

3-28. All of the extender boards contain markings which indicate the printed board assemblies with which they may be used. The markings are explained as follows:

a. Extender boards for use with the printed board assemblies of receiver-transmitters of AN/APX-64 include markings which are the same as the printed board to be extended, e.g., A3A1, A3A2, A3A3, A5A1, A5A2, etc.

b. Extender boards for use with Receiver-Transmitter RT-859/APX-72 have reference designations which agree with the printed board assembly designations on the RT-859/APX-72.

3-29. Figure 3-8 is a tabular listing of the various receiver-transmitters, their corresponding modules, and the proper extender board to be used with each printed board assembly.

RECEIVER-TRANSMITTER	CORRESPONDING MODULE	PRINTED BOARD REF DESIG	REF DESIG
RT-727/APX-64, RT-728/APX-64, or RT-731/APX-64	Decoder Module KY-574/APX-64	A3A1	A14
		A3A2	A10
		A3A3	A12
	Coder Module KY-575/APX-64	A5A1	A15
		A5A2	A11
		A5A3	A13
	Reference Signal Generator Module O-1291/APX-64	A6A1	A8
		A6A2	A9
	Test Module TS-2285/APX-64	A9	A7
RT-859/APX-72	Video Processor (4023635-0501)*	A1	A1
	Decoder (4023496-0502)*	A2	A2
	Mode 4 (4023635-0502)*	A3	A3
	Clock (4023635-0503)*	A4	A4
	Control (4023496-0501)*	A5	A5
	Gating (4023635-0504)*	A6	A6

*Bendix Part No.

Figure 3-8. Extender Board Data

3-30. Observe the following procedure in connecting the extender boards:

a. Remove the printed board assembly to be tested from the receiver-transmitter chassis while observing the orientation of the component side of the board assembly with respect to the chassis receptacle.

b. Ascertain the reference designation of the printed board assembly to be tested.

c. Choose the proper extender board to be used by matching the reference designation of the printed board assembly and the nomenclature of the transponder set involved with the marking on the extender board (figure 3-8).

d. Place the extender board in the chassis receptacle with the side of the board containing the appropriate marking facing the same direction as was the component side of the board. Make sure that the extender board is fully seated in the chassis receptacle.

e. Place the board assembly in the extender board receptacle. Make sure that the board assembly is properly seated in the extender board. For instructions on testing the various printed boards, refer to the applicable transponder technical manual.

3-31. ENERGIZING THE TEST SET.

3-32. When the proper interconnections and preliminary control settings have been made, the test set may be energized by proceeding as follows:

a. Place the 6 AMP POWER circuit breaker to the ON position.

b. With the METER SELECT switch in the AC position, adjust the AC CONTROL so that the meter indicates 115 volts.

c. Place the METER SELECT switch in the DC position and adjust the DC CONTROL to obtain the required voltage reading on the voltmeter. The test set is now energized. Tests should be performed in accordance with the instructions contained in the applicable equipment technical manuals.

3-33. DE-ENERGIZING INSTRUCTIONS.

3-34. Upon completion of tests, the following steps should be taken to shut down the test set:

a. Place the 6 AMP POWER circuit breaker to the OFF position.

b. Place all other controls to the settings listed in figure 3-6.

c. Disconnect all cables, adapters, extender boards, etc., and store accessory items in their proper storage areas in the transit case.

SECTION IV

MAINTENANCE INSTRUCTIONS

4-1. SCOPE.

4-2. This section contains a functional description of the test set circuitry, checkout procedures. Calibration check procedures, troubleshooting procedures, schematic diagrams, and other information pertinent to the maintenance of the equipment.

4-3. FUNCTIONAL DESCRIPTION.

4-4. GENERAL. Transponder Set Test Set AN/APM-239A is a portable test set designed for the maintenance support of the IFF transponder receiver-transmitters enumerated in paragraph 1-4.

4-5. Paragraphs 4-6 through 4-12 describe the-functioning of the test set. The functional block diagram. figure 4-1, illustrates the relationship of the various circuits in the test set, and figure 4-4 provides a schematic diagram of the unit.

4-6. A-C AND D-C CONTROLS. Incoming a-c power is applied through 6AMP POWER circuit breaker CB1 to AC CONTROL autotransformer T1. This control is adjusted to obtain 115 volts ac. The 115-volt a-c output of the autotransformer is applied via 2 AMP AC fuse F1 to METER SELECT switch S21 in the a-c and d-c voltmeter and ammeter circuits. The input ac power is also applied to DC CONTROL autotransformer T2 which adjusts the primary voltage of transformer T3 in the power supply circuit. When power is applied to the AC and DC CONTROL autotransformers via circuit breaker CB1, the white POWER ON indicator is illuminated.

4-7. POWER SUPPLY CIRCUIT. Transformer T3 develops an output voltage (approximately 35 volts rms across terminals 3 and 4), depending on the autotransformer setting. This output is full-wave rectified by diodes CR1 to CR4 and is then filtered by inductor L1 and capacitor C1. The resulting 28-volt d-c output is then applied across bleeder resistors R1 and R2 to METER SELECT switch S21 in the a-c and d-c voltmeter and ammeter circuits. Transformer T3 also develops 28 volts ac across terminals 7 and 5, and 6 volts ac across terminals 6 and 5, which are applied to the PANEL LIGHTS switch. This switch selects either 6 or 28 volts ac as the panel light voltage which is then applied via connector PI to the transponder set control.

4-8. A-C AND D-C VOLTMETER AND AMMETER CIRCUITS. . METER SELECT. switch S21 receives 115-volts a-c at pin 2, and +28 volts dc at pins 5 and 12. When the switch is in the AC position, 115 volts a-c is applied via pins 2 and 1 of the switch to ammeter M2. The 115 volts is also applied to half-wave rectifier CR9 which converts the a-c to d-c for use by the voltmeter. The resulting dc is applied, via pins 10 and 11 of the switch, to voltmeter M1 which is calibrated to indicate the a-c voltage from the, half-wave rectified a-c. The 115 volts ac is applied to the receiver-transmitter under test via TRANSPONDER connector J2 (pin C15) and to the computer via MODE 4 COMPUTER connector J4 (pin 1) through ammeter M2 which indicates the a-c current being drawn. The 28 volts dc is applied, via pins 5 and 4 of METER SELECT switch S21 and 10 AMP DC fuse F2, to output connectors J3, J4, and P1 and to POWER MODE switch S20. This switch inserts 1/2 AMP DC fuse F3 into the 28-volt dc output line to TRANSPONDER connector J2 when in the AC/DC position, and removes this fuse when in the DC ONLY position. It also opens 115 volt circuit to J2-C15 when in the DC ONLY position.

4-9. When the METER SELECT switch is in the DC position, 115 volts a-c is applied via pins 2 and 3 of the switch to the receiver-transmitter under test via TRANSPONDER connector J2 and to the computer via MODE 4 COMPUTER connector J4. The 28 volts dc is applied via pins 5 and 6 of the METER SELECT switch to ammeter M2 and via pins 12 and 11 of the switch to voltmeter M1 which indicates the d-c current and voltage, respectively. The 28 volts dc is applied via the ammeter, and 10 AMP DC fuse F2, to output connectors J3, J4 and P1, and to POWER MODE switch S20. This switch operates in the same manner as described earlier, and the 28 volts dc is applied to the receiver-transmitter under test via TRANSPONDER connector J2.

4-10. REFERENCE REGULATOR. A +28-volt d-c level is applied to the reference regulator dropping resistor, R3. This resistor and filter capacitor C2 function in conjunction with zener diode VR1 and diodes CR5 and CR6 to provide the reference voltages required for the Mode C encoder simulator circuits. Zener diode VR1 provides an 18.5-volt drop while diodes CR5 and CR6 provide 0.75-volt drops each. Therefore, at the anode of CR5, a 1.5 volt d-c reference voltage is picked off and applied to the Mode C encoder simulator circuits. At the cathode of VR1, a 20-volt d-c reference voltage is picked off and applied to the Mode C encoder simulator circuits.

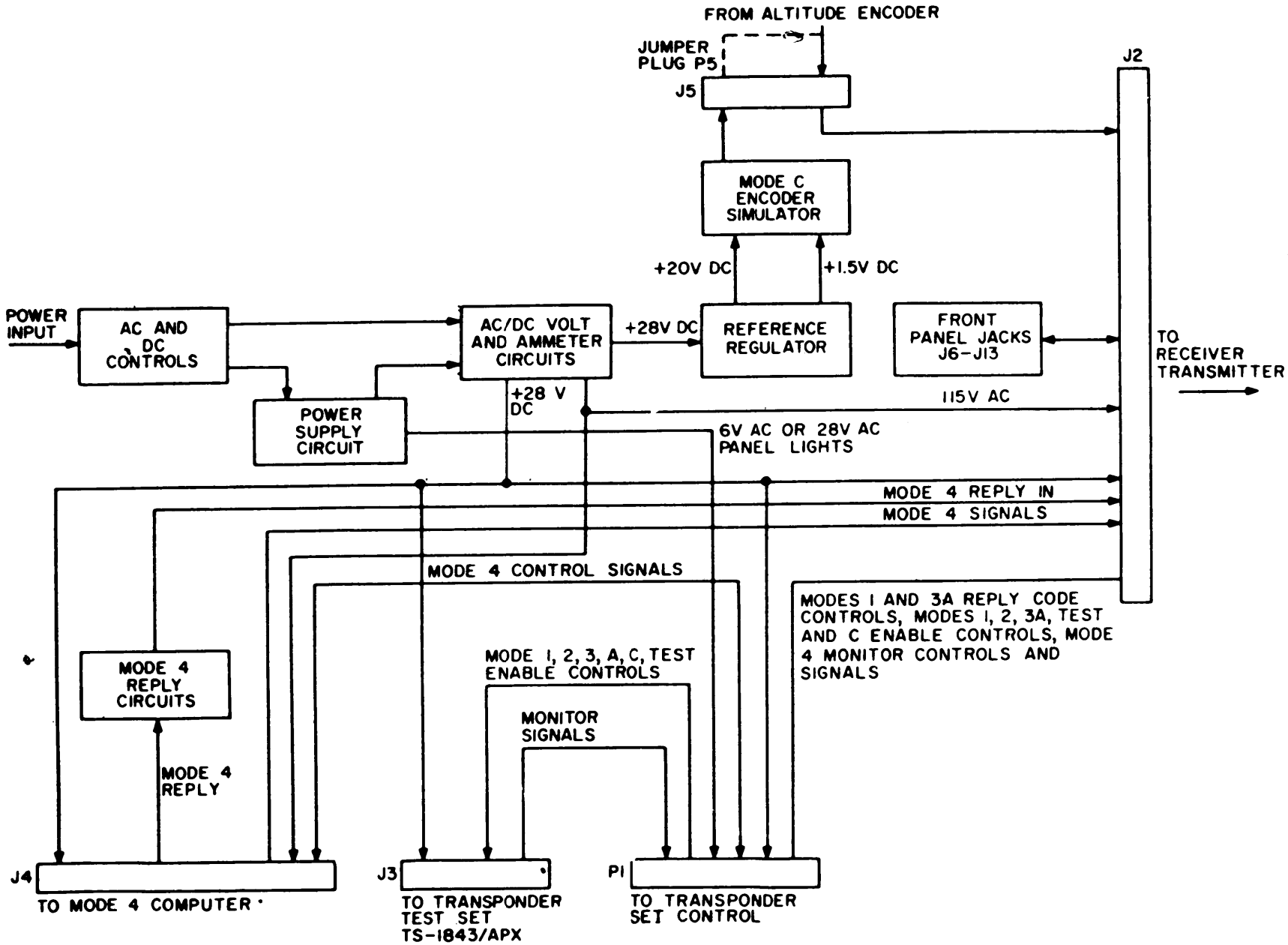

Figure 4-1. Functional Block Diagram

4-11. MODE C ENCODER SIMULATOR. The Mode C encoder simulator consists of the TEST CONDITION switch, S13, and 11 toggle switches, S2 through S12. S13 is a two-position wafer switch which in the VOLTS position applies the two test voltages from the reference regulator to the 11 toggle switches, and in the OHMS position allows electrical connection between the 11 toggle switches and the 22 test resistors, R4 through R25, located on terminal board TB1. Each of the 11 toggle switches is labeled to represent a single bit of the Mode C reply code, and applies either a turn-on (ON position) or turn-off (OFF position) test condition to MODE C ENCODER connector J5. When jumper plug P5 is connected to J5, the simulated Mode C reply code lines are routed through the test set harness to TRANSPONDER connector J2 as the Mode C inputs to the receiver-transmitter.

4-12. MODE 4 REPLY CIRCUIT. The Mode 4 reply circuit consists basically of a limiter, which produces a +5-volt output pulse when the received Mode 4 reply exceeds +5 volts, and which allows the Mode 4 reply signal to pass reduced in amplitude by 0.5 volt when it is less than or equal to +5 volts. The Mode 4 reply signal is applied via S17 (in the REPLY position) to the cathode of diode CR7. The anode of CR7 is biased on by resistors R27, R28, and R29 and zener diode VR2. This network produces a level of +6.5 volts at the junction of R28 and VR2, which is required to compensate for the diode voltage drops to provide +5 volts limiting. In this manner, when the Mode 4 reply signal is less than or equal to +5-volts, diode CR7 conducts, applying the Mode 4 reply to the base of transistor Q1, Also, if the Mode 4 reply exceeds +5 volts, diode CR7 opens and the +5-volt bias is applied to the base of transistor Q1. Transistor Q1 is an emitter follower which drives the Mode 4 reply output to the receiver-transmitter under test.

4-13. CONTROLS, INDICATORS AND CONNECTORS. The balance of the circuitry of the test set consists of the internal intraconnecting wiring harness and certain controls and indicators connected to the harness which are used to simulate or monitor functions of the transponder set under test. The names, functions, and locations of all test set controls, indicators and connectors are provided in figures 3-1 and 3-2. The internal wiring harness and the cables, supplied as accessories with the test set, provide interconnection between the test set, the transponder set control, and the receiver-transmitter. In addition, functions which are associated with Transponder Computer KIT-1A/TSEC, Transponder Set Test Set TS-1843/APX, and the altitude encoder are made available at connectors J4 (MODE 4 COMPUTER), J3 (TRANSPONDER TEST SET) and J5 (MODE C ENCODER), to facilitate interconnection of these units.

4-14. Nine BNC connectors, J6 through J14, are provided on the test set front panel to allow access through the internal wiring harness to various video functions of the receiver-transmitter. These connectors permit the use of external test equipment or simulators to introduce certain signals, normally found in the aircraft system, to the equipment under test, and also provide a means of monitoring other receiver-transmitter functions.

4-15. TEST EQUIPMENT REQUIRED.

4-16. The following test equipment or equivalent is required for test set maintenance:

EQUIPMENT	MODEL OR TYPE NO.
Multimeter	AN/PSM-6( )
AC-DC Differential Voltmeter	John Fluke Model 803
Simulator Test Set	AN/APM-245
Oscilloscope	Tektronix 545

4-17. CHECKOUT PROCEDURE.

4-18. The following procedure should be performed to determine that the test set is operating properly.

a. Place the REPLY-INTERRUPT switch in the REPLY position. Energize the test set in accordance with the procedure of paragraph 3-31.

b. Connect the simulator test set to MODE 4 COMPUTER connector J4 and operate to produce a Mode 4 reply pulse train to the test set. Vary the magnitude of the pulse train from +2 to +35 volts while observing the, limited Mode 4 reply pulse train as directed in c.

c. Connect cable W1 to TRANSPONDER connector J2. Connect an oscilloscope to pin 47 of cable W1, terminated in 92 ohms, and observe the amplitude of the limited Mode 4 reply pulse train. The amplitude

should vary with the input pulse train up to an amplitude of + 5 ±0.5 volts; above this point, the limited pulse train should remain at +5 ±0.5 volts.

d. Remove the cable, oscilloscope and the simulator test set.

e. Place the PANEL LIGHTS switch in the 6V position or the 28V position depending on whether the control box used requires 6-volt or 28-volt lighting.

f. Check that all edge-lighted panel lamps are illuminated.

g. Place the PANEL LIGHTS switch to the OFF position.

h. Place the TEST CONDITION switch in the VOLTS position.

i. Connect the multimeter to pin m of MODE C ENCODER connector J5.

j. Place MODE C ENCODER SIMULATOR switch C1 in the OFF position and observe that the multimeter indicates +20 ± 1.5 volts dc.

k. Place MODE C ENCODER SIMULATOR switch C1 in the ON position and observe that the multimeter indicates +1.5 ± 0.5 volts dc.

l. Disconnect the multimeter.

4-19. PREVENTIVE MAINTENANCE.

4-20. Figure 4-2 outlines the checks to be made to determine and maintain serviceability. The chart indicates what to inspect and the procedure for inspection. The checks should be performed weekly when the test set is in relatively continuous use. They should be performed monthly when the test set is used intermittently.

ITEM	PROCEDURE
Completeness	Check the equipment for completeness (figure 1-3). In particular make sure that the transit case cover and the various accessory items have not been misplaced.
Exterior Surfaces	Clean the exterior of all units with a clean, lint-free cloth using cleaning compound Federal Stock No. 7930-395-9542 or equivalent to remove any accumulated oil film and/or dust from the outside of the units. Dry all surfaces thoroughly with a clean cloth. Inspect painted surfaces for spots, chips, cracks or corrosion. Touch up or refinish as necessary.
Cables, Connectors, Adapters, and Extender Boards	Check for bent or broken pins, or damaged threads. Clean dirt from contacts. Check cables for cuts, kinks, breaks, or fraying. Repair any cuts, kinks, breaks, or fraying. Repair any cuts in cable insulation by covering with rubber tape and then with friction tape. Repair or replace all damaged cables. Replace all damaged connectors, adapters, and extender boards.
Controls and Switches	Observe knobs and switches for proper mechanical action by setting each control through each of its possible positions.

Figure 4-2. Maintenance Chart

4-21. CALIBRATION CHECKS.

4-22. This section describes the procedures for zeroing and checking the accuracy of the voltmeter and ammeter on the test set and of the fault isolation meter.

4-23. ZEROING OF METERS. The fault isolation meter and the voltmeter and ammeter should be checked periodically for proper zero readings. Adjusting screws are located on the face of each meter for the purpose of making any corrections required.

4-24. FAULT ISOLATION METER CHECK. The fault isolation meter should be checked for accuracy once a month in accordance with the following procedure. Accurate standard voltage sources of +20-volts d-c and 6.3-volts a-c, 400HZ are required to check this meter. If the check indicates that the meter is inaccurate, the meter should be replaced.

a. Place the fault isolation meter selector switch to the +20 VDC position.
b. Apply the +20-volts d-c standard across pins A (+) and M (-) of connector J1 of the meter.
c. Observe that the meter reads 20 A ± 1.0-volts.
d. Disconnect the +20-volts d-c standard and place. the selector switch to the 6.3 VAC position.
e. Apply the 6.3-volts a-c, 400Hz standard across pins D and M of connector J1.
f. Observe that the meter reads 6.3 ± 0.3-volts.
g. Disconnect the 6.3-volts a-c standard.

4-24A. FAULT ISOLATION METER CHECK (AIR FORCE). Forward meter to PMEL at 6 month intervals.

4-25. VOLTMETER AND AMMETER CHECK: The meters must be removed and forwarded to the PMEL at one (1) year intervals. Calibration of these meters will be in accordance with T.O. 33K1-4-1-17, Section 1611.

CAUTION

INSURE THE LINE VOLTAGE is removed from the test set prior to removing or installing these meters.

WARNING

Use care when working on the 115-volt a-c line connections. Serious injury or loss of life may result from contact with this voltage.

a. Connect the ac-dc differential voltmeter between one terminal of the 2 AMP AC fuse F1 fuseholder and ground (chassis). Place the METER SELECT switch in the AC position.

b. Turn on power and adjust the AC CONTROL autotransformer until the ac-dc differential voltmeter reads 115 volts.

c. Observe that the test set voltmeter reads 115 volts ±4.5 volts.

d. Turn off power and disconnect the ac-dc differential voltmeter.

e. Remove 10 AMP DC fuse F2.

f. Connect the Weston ammeter across the terminals of the F2 fuseholder (XF2) using alligator clips. The + meter terminal connects to the center terminal of XF2 and the - meter terminal connects to the side terminal of XF2.

g. Connect a suitable transponder set receiver-transmitter to TRANSPONDER connector J2 using the appropriate cable.

h. Turn on power and energize the receiver-transmitter.

i. Place the METER SELECT switch in the DC position.

j. Observe that the test set ammeter reads within ±4% of the Weston ammeter reading.

k. Turn off power, disconnect the Weston ammeter, and replace 10 AMP DC fuse F2. Disconnect the receiver-transmitter from J2.

4-26. TROUBLESHOOTING.

4-27. GENERAL. Paragraphs 4-28 and 4-29 cover trouble shooting of the test set components. Trouble shooting should be performed systematically to minimize down-time.

4-28. VISUAL INSPECTION. If the test set fails to operate properly, a visual check should first be performed. Check for improper control settings, poor cable connections, burned out or charred components or insulation, and obvious mechanical defects. If the cause of the trouble is not evident, proceed to the localization procedures.

4-29. LOCALIZATION PROCEDURES. Localizing troubles in the test set is mainly limited to continuity checking of the test set internal harness and the accessory cables, adaptors and extender boards. However, certain troubles may develop in the power, control, and meter circuitry of the test set or the fault isolation meter. A trouble shooting chart is presented in figure 4-3. Schematic diagrams of the test set and the fault isolation meter are provided in figures 4-4 and 4-5 respectively. Multimeter AN/PSM-6( ) should be used for fault localization.

WARNING

Use care when working on the 115-volt a-c line connections. Serious injury or loss of life may result from contact with this voltage.

TROUBLE	PROBABLE CAUSE	REMEDY
6 AMP POWER circuit breaker fails to hold in ON position.	1. Short circuit in the ac power circuitry,	1. Check ac power circuitry including T1, T2, T3, DS1, and S1 for a short circuit. Replace defective components.
	2. Defective circuit breaker.	2. Replace circuit breaker.
	3. Short circuit in the 29 volt d-c power supply.	3. Check CR1 through CR4, L1, C1, R1, and R2.
	4. Short circuit in meter circuitry.	4. Check S21, M1, and M2.
Fuse F2 blows after being replaced.	Short circuit in the reference regulator, or the Mode C encoder simulator circuitry.	Check TB1 and S2 through S13 for short circuit. Replace defective components.
Fuse F1 blows after being replaced.	Short circuit in the a-c line.	Check S21, CR9, R26, M1, or M2.
6 AMP POWER circuit breaker holds but POWER ON indicator fails to illuminate.	1. Defective lamp.	1. Replace lamp.
	2. Open circuit in the a-c wiring.	2. Check the a-c wiring up to autotransformer T1 for continuity. Repair or replace defective wiring.
Proper d-c voltage reading unattainable.	1. Defective voltmeter.	1. Replace meter.
	2. Defective autotransformer.	2. Replace autotransformer T2.
	3. Defective transformer.	3. Replace T3.
	4. Defective diodes.	4. Check CR1 through CR4.
	5. Defective capacitor.	5. Check C1.
Proper a-c voltage reading unattainable.	1. Defective voltmeter or rectifier.	1. Replace meter or rectifier.
	2. Defective autotransformer.	2. Replace autotransformer T1.

Figure 4-3. Trouble Shooting Chart (Sheet 1 of 2)

TROUBLE	PROBABLE CAUSE	REMEDY
Improper reference voltages appear at MODE C ENCODER jack.	Defective reference regulator.	Check R3, VR1, CR5, CR6, C2 on TB1. Replace defective components.
Improper current reading.	Defective ammeter.	Replace ammeter.

Figure 4-3. Troubleshooting Chart (Sheet 2 of 2)

4-30. DISASSEMBLY AND ASSEMBLY.

4-31. TRANSPONDER SET CONTROL

a. Remove the transponder set control from the test set by loosening the four captive turnlock fasteners at the corners of the set control front panel.

b. Gently pull the set control from the test set front panel far enough, to gain access to plug P1 which is connected to the rear of the set control.

c. Remove plug P1 from the connector on the rear of the set control.

4-32. TEST SET FRONT PANEL.

a. Loosen 13 captive front-panel attachment screws (index no. 142, figure 5-3).

b. Gently pull the test set from its case. All components are then accessible.

4-33. FAULT ISOLATION METER. Remove four screws (index no. 23, figure 5-5) and separate the front panel assembly from the case. All components are then accessible.

4-34. COMPONENT REMOVAL.

a. Tag the leads to components that are to be removed in order to facilitate reassembly.

CAUTION

When unsoldering or soldering semiconductor devices, provide an adequate heat sink between the component and the end of the lead being heated to prevent damage to the component.

b. Carefully unsolder the leads of the component to be removed.

4-35. REASSEMBLY. Reassembly of all components and assemblies is accomplished by reversing the procedures contained in paragraphs 4-31 through 4-34.

4-36. SCHEMATIC DIAGRAMS.

4-37. The schematic diagrams are illustrated in figures 4-4 and 4-5. Figure 4-4 is the schematic of the test set itself, figure 4-5 is the schematic of the fault isolation meter. Wiring information is contained in figure 4-6.

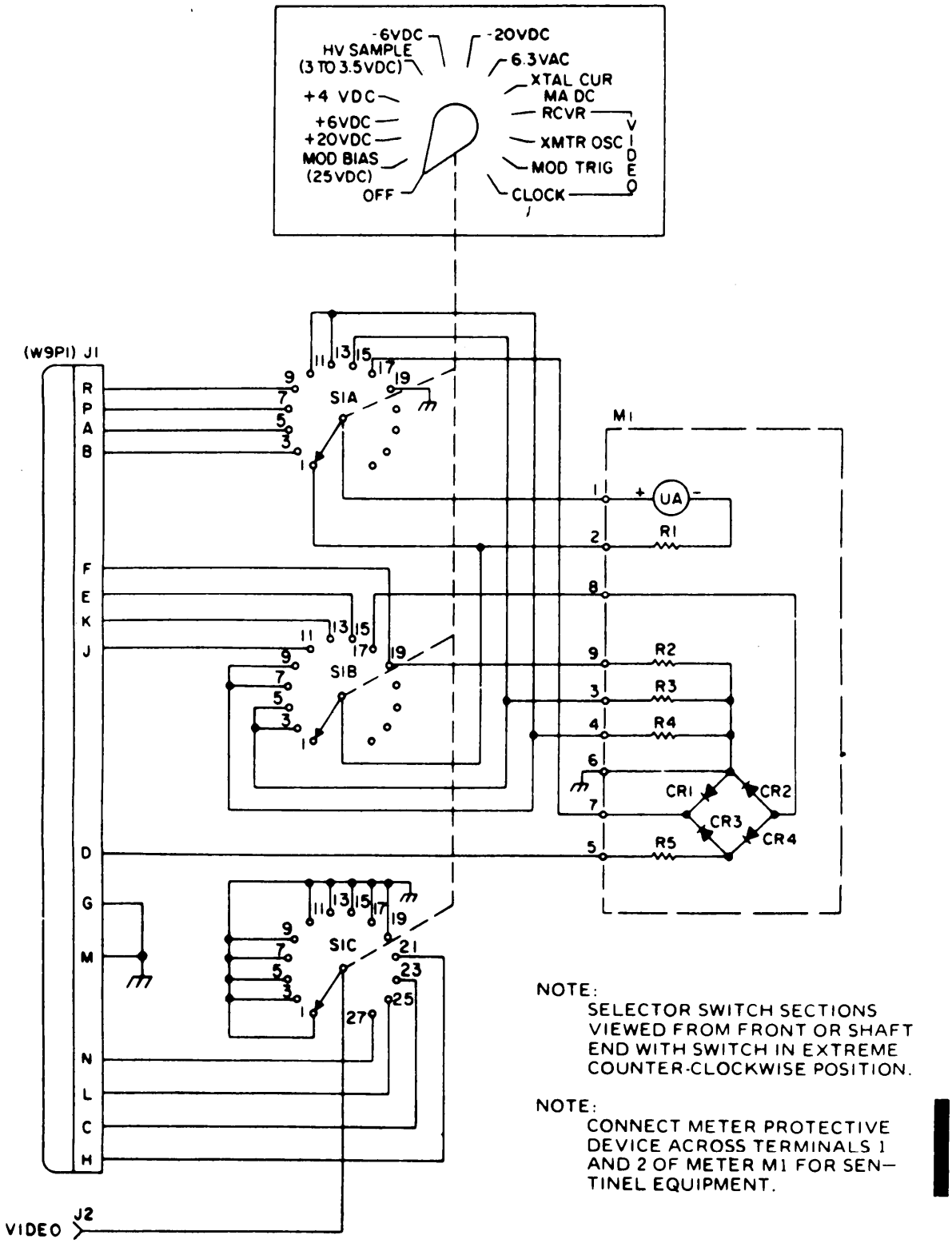

Figure 4-5. Fault Isolation Meter, Schematic Diagram

WIRE NO.	FROM	TO
Cable W1		
1	P1-C14	P2-001
2	P1-C23	P2-002
3	P1-C13	P2-003
4	P1-A22	P2-004
5	P1-C15	P2-005
6	P1-B13	P2-006
7	P1-812	P2-007
8	P1-C01	P2-008
9	P1-C22	P2-014
10	P1-A14	P2-015
11	P1-C21	P2-016
12	P1-C04	P2-017
13	P1-A13	P2-018
14	P1-C20	P2-019
15	P1-C19	P2-020
16	P1-C18	P2-021
17	P1-A20	P2-022
18	P1-C05	P2-023
19	P1-A07	P2-024
20	P1-A08	P2-025
21	P1-A09	P2-026
22	P1-A10	P2-027
23	P1-A11	P2-028
24	P1-A12	P2-029
25	P1-C06	P2-030
26	P1-C07	P2-031
27	P1-C08	P2-032
28	P1-C17	P2-033
29	P1-C16	P2-034
30	P1-C09	P2-035
31	P1-A15	P2-036
32	P1-A16	P2-037
33	P1-A17	P2-038
34	P1-A18	P2-039
35	P1-A19	P2-040
36	P1-C10	P2-041
37	P1-C11	P2-042
38	P1-A06	P2-043
39	P1-A05	P2-044
40	P1-A04	P2-050

WIRE NO.	FROM	TO
Cable W1 (cont'd)		
41	P1-A23	P2-051
42	P1-811	P2-052
43	P1-C12	P2-053
44	P1-C02	P2-054
45	P1-C03	P2-055
46	P1-A03	P2-056
47	P1-A02	P2-057
48	P1-A01	P2-058
49	P1-A21	P2-059
100	P1-B04	P2-009
100A	SH-100	SH-P1-B04
100B	SH-100	SH-P2-009
102	P1-B05	P2-010
102A	SH-102	SH-P1-B05
102B	SH-102	SH-P2-010
104	P1-B02	P2-011
104A	SH-104	SH-P1-B02
104B	SH-104	SH-P2-011
106	P1-B01	P2-012
106A	SH-106	SH-EP1-B01
106B	SH-106	SH-P2-012
108	P1-B03	P2-013
108A	SH-108	SH-P1-B03
108B	SH-108	SH-P2-013
110	P1-B06	P2-045
110A	SH-110	SH-P1-B06
110B	SH-110	SH-P2-045
112	P1-B08	P2-046
112A	SH-112	SH-P1-B08
112B	SH-112	SH-P2-046
114	P1-B10	P2-047
114A	SH-114	SH-P1-B10
114B	SH-114	SH-P2-047
116	P1-B09	P2-048
116A	SH-116	SH-P1-B09
116B	SH-116	SH-P2-048
118	P1-B07	P2-049
118A	SH-118	SH-P1-B07
118B	SH-118	SH-P2-049

Figure 4-6. Wire Run List, AN/APM-239A (Sheet 1 of 10)

WIRE NO.	FROM	TO
Cable W2		
1	P1-C14	P2-B05
2	P1-C23	P2-B04
3	P1-C13	P2-B03
4	P1-A22	P2-B07
5	P1-C15	P2-B02
7	P1-B12	P2-B01
8	P1-C01	P2-B18
9	P1-C22	P2-B32
10	P1-A14	P2-B40
11	P1-C21	P2-B58
12	P1-C04	P2-B21
13	P1-A13	P2-B45
14	P1-C20	P2-B41
15	P1-C19	P2-B64
16	P1-C18	P2-B42
17	P1-A20	P2-B34
18	P1-C05	P2-B22
19	P1-A07	P2-B51
20	P1-A08	P2-B50
21	P1-A09	P2-B49
22	P1-A10	P2-B48
23	P1-A11	P2-B47
24	P1-A12	P2-B46
25	P1-C06	P2-B23
26	P1-C07	P2-B24
27	P1-C08	P2-B25
28	P1-C16	P2-B63
29	P1-C09	P2-B26
30	P1-A15	P2-B39
31	P1-A16	P2-B38
32	P1-A17	P2-B37
33	P1-A18	P2-B36
34	P1-A19	P2-B35
35	P1-C10	P2-B27
36	P1-C11	P2-B28
37	P1-A06	P2-B52
38	P1-A05	P2-B53
39	P1-A04	P2-B54
40	P1-A23	P2-B33
41	P1-B11	P2-B62

WIRE NO.	FROM	TO
Cable W2 (cont'd)		
42	P1-C12	P2-B60
43	P1-C02	P2-B19
44	P1-C03	P2-B20
45	P1-A03	P2-B67
46	P1-A02	P2-B66
47	P1-A01	P2-B65
48	P1-A21	P2-B31
100	P1-B04	P2-B56
100A	SH-100	SH-P1-B04
102	P1-B05	P2-B55
102A	SH-102	SH-P1-B05
104	P1-B02	P2-A07
104A	SH-104	SH-P1-B02
104B	SH-104	SH-P2-A07
106	P1-B01	P2-A06
106A	SH-106	SH-P1-B01
106B	SH-106	SH-P2-A06
108	P1-B06	P2-A01
108A	SH-108	SH-P1-B06
108B	SH-108	SH-P2-A01
110	P1-B08	P2-A02
110A	SH-110	SH-P1-B08
110B	SH-110	SH-P2-A02
112	P1-B10	P2-A03
112A	SH-112	SH-P1-B10
112B	SH-112	SH-P2-A03
114	P1-B09	P2-A04
114A	SH-114	SH-P1-B09
114B	SH-114	SH-P2-A04
116	P1-B07	P2-A05
116A	SH-116	SH-P1-B07
116B	SH-116	SH-P2-A05
Cable W3		
1	P1-A	Determined
2	P1-C	By Using
3	P1-B	Activity
Cable W4		
1	P1-A	P2-A
2	P1-B	P2-B

Figure 4-6. Wire Run List, AN/APM-239A (Sheet 2 of 10)

WIRE NO.	FROM	TO
Cable W4 (cont'd)		
3	P1-C	P2-C
4	P1-D	P2-D
5	P1-E	P2-E
6	P1-F	P2-F
7	P1-H	P2-H
8	P1-J	P2-J
9	P1-K	P2-K
10	P1-L	P2-L
11	P1-M	P2-M
12	P1-N	P2-N
13	P1-P	P2-P
14	P1-R	P2-R
15	P1-S	P2-S
16	P1-T	P2-T
17	P1-U	P2-U
18	P1-V	P2-V
19	P1-W	P2-W
20	P1-X	P2-X
21	P1-Y	P2-Y
22	P1-Z	P2-Z
23	P1-AA	P2-AA
24	P1-BB	P2-BB
25	P1-CC	P2-CC
26	P1-DD	P2-DD
27	P1-EE	P2-EE
28	P1-FF	P2-FF
29	P1-HH	P2-HH
30	P1-JJ	P2-JJ
31	P1-KK	P2-KK
32	P1-LL	P2-LL
33	P1-MM	P2-MM
34	P1-NN	P2-NN
35	P1-PP	P2-PP
36	P1-RR	P2-RR
37	P1-SS	P2-SS
38	P1-TT	P2-TT
39	P1-UU	P2-UU
40	P1-VV	P2-VV
41	P1-WW	P2-WW
42	P1-XX	P2-XX

WIRE NO.	FROM	TO
Cable W6		
1	P1-001	P2-001
2	P1-002	P2-002
3	P1-003	P2-003
4	P1-004	P2-004
5	P1-005	P2-005
6	P1-006	P2-006
7	P1-007	P2-007
8	P1-008	P2-008
9	P1-009	P2-009
10	P1-010	P2-010
11	P1-011	P2-011
12	P1-012	P2-012
13	P1-013	P2-013
14	P1-014	P2-014
15	P1-015	P2-015
16	P1-A01	P2-A01
16A	SH-16	SH-P1-A01
16B	SH-16	SH-P2-A01
18	P1-A02	P2-A02
18A	SH-18	SH-P1-A02
18B	SH-18	SH-P2-A02
Cable W7		
1	P1-A	P2-A
2	P1-B	P2-B
3	P1-C	P2-C
4	P1-D	P2-D
5	P1-E	P2-E
6	P1-F	P2-F
7	P1-H	P2-H
8	P1-J	P2-J
9	P1-K	P2-K
10	P1-L	P2-L
11	P1-M	P2-M
Cable W8		
100	P1	P2
100A	SH-100	SH-P1
100B	SH-100	SH-P2

Figure 4-6. Wire Run List, AN/APM-239A (Sheet 3 of 10)

WIRE NO.	FROM	TO
Cable W9		
1	P1-B	P2-B
2	P1-A	P2-A
3	P1-P	P2-P
4	P1-J	P2-J
5	P1-K	P2-K
6	P1-E	P2-E
7	P1-D	P2-D
8	P1-F	P2-F
9	P1-M	P2-M
10	P1-H	P2-H
10A	SH-10	SH-12
12	P1-C	P2-C
12A	SH-12	SH-14
14	P1-L	P2-L
14A	SH-14	SH-16
16	P1-N	P2-N
16A	SH-16	P1-G
18	P1-R	P2-R
Cable W10		
1	P1-A	P2-A
2	P1-B	P2-B
3	P1-C	P2-C
4	P1-D	P2-D
5	P1-E	P2-E
6	P1-F	P2-F
7	P1-H	P2-H
8	P1-J	P2-J
9	P1-K	P2-K
10	P1-L	P2-L
11	P1-M	P2-M
12	P1-N	P2-N
13	P1-P	P2-P
14	P1-R	P2-R
15	P1-S	P2-S
16	P1-T	P2-T
17	P1-U	P2-U
18	P1-V	P2-V
19	P1-W	P2-W
20	P1-X	P2-X

WIRE NO.	FROM	TO
Cable W11		
1	P1-008	P2-008
2	P1-006	P2-006
3	P1-003	P2-003
4	P1-002	P2-002
5	P1-001	P2-001
6	P1-015	P2-015
7	P1-013	P2-013
8	P1-012	P2-012
9	P1-011	P2-011
10	P1-023	P2-023
11	P1-016	P2-016
12	P1-025	P2-025
13	P1-D	P2-D
14	P1-C	P2-C
15	P1-A	P2-A
16	P1-024	P2-024
100	P1-d	P2-d
100A	SH-100	SH-P1-d
100B	SH-100	SH-P2-d
102	P1-c	P2-c
102A	SH-102	SH-P1-c
102B	SH-102	SH-P2-C
104	P1-b	P2-b
104A	SH-104	SH-P1-b
104B	SH-104	SH-P2-b
106	P1-a	P2-a
106A	SH-106	SH-P1-a
106B	SH-106	SH-P2-a
Cable W12		
1	P1-A	P2-001
2	P1-B	P2-002
3	P1-C	P2-003
4	P1-D	P2-004
5	P1-E	P2-005
6	P1-F	P2-006
7	P1-G	P2-007
8	P1-H	P2-008
9	P1-I	P2-009
10	P1-J	P2-010

Figure 4-6. Wire Run List, AN/APM-239A (Sheet 4 of 10)

WIRE NO.	FROM	TO
	Cable W13	
1	P1-C14	P2-032
2	P1-C23	P2-044
3	P1-C13	P2-045
4	P1-C22	P2-021
5	P1-A14	P2-010
6	P1-C21	P2-023
7	P1-A13	P2-009
8	P1-C20	P2-025
9	P1-C19	P2-022
10	P1-C18	P2-014
11	P1-A03	P2-015
12	P1-A07	P2-007
13	P1-A08	P2-006
14	P1-A09	P2-005
15	P1-A10	P2-004
16	P1-A11	P2-003
17	P1-A12	P2-002
18	P1-C16	P2-036
19	P1-A15	P2-020
20	P1-A16	P2-019
21	P1-A17	P2-018
22	P1-A18	P2-017
23	P1-A19	P2-016
24	P1-A06	P2-001
25	P1-A05	P2-008
26	P1-A22	P2-024
27	P1-A23	P2-035
28	P1-A20	P2-011
29	P1-A04	P2-013
30	P1-A21	P2-012
	Cable W14	
1	P1-002	P2-f
2	P1-004	P2-h
3	P1-005	P2-J
4	P1-006	P2-K
5	P1-007	P2-T
6	P1-008	P2-a
7	P1-009	P2-L
8	P1-010	P2-F

WIRE NO.	FROM	TO
	Cable W14 (cont'd)	
9	P1-011	P2-H
10	P1-012	P2-G
12	P1-015	P2-B
13	P1-016	P2-j
14	P1-017	P2-g
15	P1-018	P2-M
16	P1-024	P2-E
17	P1-025	P2-A
18	P1-026	P2-C
19	P1-027	P2-D
20	P1-028	P2-e
21	P1-029	P2-d
22	P1-030	P2-b
23	P1-031	P2-N
24	P1-032	P2-Y
25	P1-033	P2-Z
26	P1-035	P2-W
27	P1-036	P2-V
28	P1-037	P2-U
29	P1-038	P2-X
30	P1-042	P2-c
31	P1-055	P2-S
	Cable W15	
1	P1-A	P2-001
2	P1-B	P2-002
3	P1-C	P2-003
4	P1-E	P2-005
5	P1-e	P2-006
6	P1-h	P2-007
7	P1-H	P2-008
8	P1-a	P2-009
9	P1-K	P2-010
10	P1-r	P2-011
11	P1-k	P2-012
12	P1-N	P2-013
13	P1-n	P2-014
14	P1-R	P2-015

Figure 4-6. Wire Run List, AN/APM-239A (Sheet 5 of 10)

WIRE NO.	FROM	TO
Cable W16		
1	P1-A	P2-022
2	P1-B	P2-023
3	P1-C	P2-024
4	P1-S	P2-004
5	P1-E	P2-005
6	P1-e	P2-006
7	P1-h	P2-007
8	P1-H	P2-008
9	P1-a	P2-009
10	P1-K	P2-010
11	P1-r	P2-011
12	P1-k	P2-012
13	P1-N	P2-013
14	P1-n	P2-014
15	P1-R	P2-015
Cable W17		
100	P1	P2
100A	SH-100	SH-P1
100B	SH-100	SH-P2
Cable W18		
1	P1-001	P2-001
2	P1-002	P2-002
3	P1-003	P2-003
4	P1-004	P2-004
5	P1-005	P2-005
6	P1-006	P2-006
7	P1-007	P2-007
8	P1-008	P2-008
9	P1-009	P2-009
10	P1-010	P2-010
11	P1-011	P2-011
12	P1-012	P2-012
13	P1-013	P2-013
14	P1-014	P2-014
15	P1-015	P2-015
16	P1-A01	P2-A01
100	P1-A02	P2-A02
100A	SH-100	SH-P1-A02
100B	SH-100	SH-P2-A02

WIRE NO.	FROM	TO
Cable W19		
1	P1-001	P2-001
2	P1-002	P2-002
3	P1-003	P2-003
4	P1-004	P2-004
5	P1-005	P2-005
6	P1-006	P2-006
7	P1-007	P2-007
8	P1-008	P2-008
9	P1-009	P2-009
10	P1-010	P2-010
11	P1-011	P2-011
12	P1-012	P2-012
13	P1-013	P2-013
14	P1-014	P2-014
15	P1-015	P2-015
100	P1-A02	P2-A02
100A	SH-100	SH-P1-A02
100B	SH-100	SH-P2-A02
Test Set Wiring Harness		
1	S2-002	J5-s
2	S9-002	J5-g
3	S4-002	J5-b
4	S10-002	J5-L
5	S5-002	J5-f
6	S7-C02	J5-J
7	S8-002	J5-P
8	S12-002	J5-T
9	S6-002	J5-F
10	S11-002	J5-m
11	S3-002	J5-p
12	S2-001	S13A-F10
13	S9-001	S13A-F02
14	S4-001	S13A-F06
15	S10-001	S13A-R08
16	S5-001	S13A-R12
17	S7-001	S13A-R04
18	S8-001	S13B-F02
19	S12-001	S13B-F06
20	S16-001	S13B-R08

Figure 4-6. Wire Run List, AN/APM-239A (Sheet 6 of 10)

WIRE NO.	FROM	TO
Test Set Wiring Harness (cont'd)		
21	S11-001	S13B-R12
22	S3-001	S13B-R04
23	S2-003	S13C-F10
24	S9-003	S13C-F02
25	S4-003	S13C-F06
26	S10-003	S13C-R08
27	S5-003	S13C-R12
28	S7-003	S13C-R04
29	S8-003	S13D-F02
30	S12-003	S13D-F06
31	S6-003	S13D-R08
32	S11-003	S13D-R12
33	S3-003	S13D-R04
34	S2-001	TB1-005
35	S9-001	TB1-006
36	S4-001	TB1-007
37	S10-001	TB1-009
38	S5-001	TB1-008
39	S7-001	TB1-010
40	S8-001	TB1-011
41	S12-001	TB1-012
42	S6-001	TB1-015
43	S11-001	TB1-013
44	S3-001	TB1-014
45	S2-003	TB1-018
46	S9-003	TB1-019
47	S4-003	TB1-017
48	S10-003	TB1-020
49	S5-003	TB1-022
50	S7-003	TB1-021
51	S8-003	TB1-023
52	S12-003	TB1-024
53	S6-003	TB1-025
54	S11-003	TB1-026
55	S3-003	TB1-027
56	TB1-016	E006
57	J1-A	FL1-001
58	FL1-002	CB1-L11
59	CB1-L01	T1-001

WIRE NO.	FROM	TO
Test Set Wiring Harness (cont'd)		
60	J1-C	FL2-001
61	FL2-002	CB1-L12
62	CB1-L02	T1-004
63	CB1-L01	T2-001
64	CB1-L02	T2-004
65	CB1-L01	DS1-001
66	CB1-L02	DS1-002
67	T1-003	F1-L1
68	F1-L0	S21-002
69	S21-001	M2-001
70	T2-003	TB2-001
71	T2-004	TB2-002
72	TB1-028	E004
73	S21-003	M2-002
74	M2-003	S21-008
75	S21-002	TB1-029
76	TB1-031	S21-010
77	M1(-)	E006
78	S21-011	M1(+)
79	S21-006	M2-005
80	M2-006	S21-004
81	S21-004	F2-L1
82	F2-L0	S20-002
83	S20-002	E005
84	S21-005	S21-012
85	S21-005	C1-+
86	C1-+	TB2-005
87	S20-003	F3-L1
88	S20-001	F3-L0
89	S20-001	J2-C23
90	S20-009	J2-C15
91	P1-020	J2-A01
92	P1-019	J2-A02
93	P1-018	J2-A03
94	P1-017	J2-A04
95	P1-016	J2-A05
96	P1-015	J2-A06
97	P1-038	J2-A07
98	P1-037	J2-A08

Figure 4-6. Wire Run List, AN/APM-239A (Sheet 7 of 10)

WIRE NO.	FROM	TO
Test Set Wiring Harness (cont'd)		
99	P1-036	J2-A09
100	P1-035	J2-A10
101	P1-033	J2-A11
102	P1-032	J2-A12
103	P1-006	J2-A13
104	P1-009	J2-A14
105	P1-030	J2-A15
106	P1-029	J2-A16
107	P1-028	J2-A17
108	P1-027	J2-A18
109	P1-026	J2-A19
110	P1-025	J2-A20
111	P1-004	J2-A21
112	P1-024	J2-A22
113	P1-055	J2-A23
114	P1-042	J2-C16
115	P1-054	S15-001
116	J2-C17	S15-002
117	S15-003	E006
118	P1-002	J2-C18
119	P1-011	J2-C19
120	P1-005	J2-C20
121	P1-008	J2-C21
122	P1-010	J2-C22
123	P1-012	S1-002
124	P1-048	J4-008
125	P1-047	J4-007
126	P1-034	J4-006
127	P1-023	J4-003
128	P1-021	J4-021
129	P1-003	J4-013
130	P1-001	J4-024
131	P1-022	J4-D
132	P1-051	E005
133	P1-045	J3-C
134	P1-044	J3-G
135	P1-043	J3-F
136	P1-041	J3-E
137	P1-040	J3-D

WIRE NO.	FROM	TO
Test Set Wiring Harness (cont'd)		
138	P1-046	J3-H
139	P1-031	EJ-005
140	P1-053	EJ-Q05
141	J2-B12	DS2-001
142	J4-001	M2-002
143	DS2-002	LUG-J001
144	J2-B11	S19-002
145	J4-015	S19-001
146	S19-003	E006
147	J4-016	E004
148	J4-002	LUG-J005
149	J4-011	LUG-J005
150	J4-012	LUG-J005
151	J4-C	LUG-J005
152	J4-025	S18-001
153	S18-002	E006
154	J3-B	LUG-J003
155	J5-E	J2-C11
156	J5-S	J2-C10
157	J5-n	J2-C09
158	J5-N	J2-C08
159	J5-k	J2-C07
160	J5-r	J2-C06
161	J5-K	J2-C05
162	J5-a	J2-C04
163	J5-H	J2-C03
164	J5-h	J2-C02
165	J5-e	J2-C01
166	J2-C12	DS3-001
167	DS3-002	E006
168	J2-C13	LUG-J002
169	J2-C14	LUG-J002
170	J5-B	S14-001
171	S14-001	J3-1
172	J5-A	S14-003
173	S14-002	J3-J
174	J3-A	E005
175	TB2-003	S1-003
176	TB2-004	S1-001

Figure 4-6. Wire Run List, AN/APM-239A (Sheet 8 of 10)

WIRE NO.	FROM	TO
Test Set Wiring Harness (cont'd)		
177	TB1-001	S13C-F11
178	TB1-030	S13A-F11
179	TB1-001	VR1-A
180	TB1-030	VR1-C
181	J12-001	S16-003
183	S21-009	M2-004
184	J1-B	LUG-J001
185	J5-R	LUG-J005
186	TB2-006	LUG-J001
300	J6-001	J2-B01
300A	SH-300	SH-J6-001
300B	SH-300	SH-J8-001
302	J7-001	J2-B02
302A	SH-302	SH-J7-001
302B	SH-302	SH-J2-B02
304	J8-001	J2-B03
304A	SH-304	SH-JB-001
304B	SH-304	SH-J2-B03
306	J10-001	J2-B04
306A	SH-306	SH-J10-001
306B	SH-306	SH-J2-B04
308	J10-001	P1-007
308A	SH-30B	SH-J10-001
310	J11-001	J2-B05
310A	SH-310	SH-J11-001
310B	SH-310	SH-J2-B05
312	J14-001	J2-B06
312A	SH-312	SH-J14-001
312B	SH-312	SH-J2-B06
314	J13-001	J2-B08
314A	SH-314	SH-J13-001
314B	SH-314	SH-J8-B08
316	S20-004	J2-B07
316A	SH-316	S20-005
316B	SH-316	SH-J2-B07
318	J14-001	J4-c
318A	SH-318	SH-J14-001
318B	SH-318	SH-J4-c
320	J13-001	J4-b
320A	SH-320	SH-J13-001

WIRE NO.	FROM	TO
Test Set Wiring Harness (cont'd)		
320B	SH-320	SH-J4-b
322	S16-003	J4-a
322A	SH-322	SH-J12-001
322B	SH-322	SH-J4-a
324	S16-002	J2-B09
324A	SH-324	SH-J12-001
324B	SH-324	SH-J2-B09
326	S17-003	J4-d
326A	SH-326	SH-J9-001
326B	SH-326	SH-J4-d
328	S17-002	TB1-004
328A	SH-328	SH-J9-001
328B	SH-328	TB1-002
330	TB1-003	J2-B10
330A	SH-330	TB1-002
330B	SH-330	SH-J2-B10
332	S20-008	S21-003
350	J9-001	TB1-003
350A	SH-350	SH-J9-001
350B	SH-350	TB1-002
500	C1-+	E002
501	C1--	E001
502	E004	E005
503	S13A-F11	S13A-F07
504	S13A-F07	S13A-F03
505	S13A-F03	S13A-R01
506	S13A-R01	S13A-R05
507	S13A-R05	S13A-R09
508	S13A-R09	S13B-F07
509	S13B-F07	S13B-F03
510	S13B-F03	S13B-R01
511	S13B-R01	S13B-R05
512	S13B-R05	S13B-R09
513	S13C-F11	S13C-F07
514	S13C-F07	S13C-F03
515	S13C-F03	S13C-R01
516	S13C-R01	S13C-R05
517	S13C-R05	S13C-R09
518	S13C-R09	S13D-F07

Figure 4-6. Wire Run List, AN/APM-239A (Sheet 9 of 10)

WIRE NO.	FROM	TO
	Test Set Wiring Harness (cont'd)	
519	S13D-F07	S13D-F03
520	S13D-F03	S13D-R01
521	S13D-R01	S13D-R05
522	S13D-R05	S13D-R09
1001	TB2-001	T3-002
1002	TB2-002	T3-001
1003	TB2-003	T3-007
1004	TB2-004	T3-006
1005	TB2-005	L1-002
1006	TB2-006	T3-005
1007	T3-005	CR3-A
1008	T3-003	CR4-C
1009	T3-004	CR3-C
1010	L1-001	CR1-C
1011	CR4-C	CR1-A
1012	CR1-C	CR2-C
1013	CR3-C	CR2-A
1014	CR3-A	CR4-A
1015	C5-001	CR1-A
1016	C5-002	CR2-A

Figure 4-6. Wire Run List, AN/APM-239A (Sheet 10 of 10)

SECTION V

PARTS LIST

5-1. INTRODUCTION.

5-2. This Parts List lists, describes and illustrates the assemblies, subassemblies and detail parts that comprise the Test Set, Transponder Set AN/APM-239A. This equipment is manufactured by Hazeltine Corporation, Little Neck, New York, under contract number F33657-67-C-1319. This Parts List is for Air Force and Navy use only. For Army use refer to TM 11-6625-842-25P.

5-3. The Parts List is arranged in the following three groups: INTRODUCTION, ILLUSTRATIONS AND PARTS LISTING, and NUMERICAL INDEX

5-4. ILLUSTRATIONS.

5-5. The illustrations are arranged consecutively by figure number and carry the same caption as their accompanying listing. Each assembly is illustrated to a degree necessary to identify its detail parts.

5-6. PARTS LISTING.

5-7. The Parts Listing is arranged in four columns as follows: SECTION, FIGURE AND INDEX NO PART NO., DESCRIPTION, and USABLE ON CODE.

5-8. The SECTION AND INDEX NO. column lists the section in the handbook, the figure number of the illustration, and the index number of the parts shown in the illustration.

5-9. The PART NO. column lists the manufacturer's part number or the government standard part number. When the Latter is used, the DESCRIPTION column cites the applicable controlling government agency code.

5-10. The DESCRIPTION column lists the name of the part with applicable modifiers and any additional information necessary to identify the part. Each detail part or subassembly is indented to indicate the relationship to its next higher assembly. For vendor parts, the vendor's code, in accordance with Federal Supply Code for Manufacturers H4-1, will be found in this column enclosed in parentheses, followed by the contractor's part number also enclosed in parenthesis. Vendor Codes for government standard parts are also listed in the Description Column. When a vendor's code is not listed Hazeltine is the manufacturer of the part. Explanation of Vendors' Codes will be found in paragraph 5-33.

5-11. The USABLE ON CODE column contains suitable coding for assemblies and parts to indicate specific usability to its next higher assembly. Where no USABLE ON CODE appears, the part is applicable to all assemblies.

5-12. NUMERICAL INDEX.

5-13. The Numerical Index, which immediately follows the parts listing, includes parts shown in the Part Number Column of the Parts Listing cross referenced to the Provisioning Codes assigned by the Air Force and Navy.

5-14. PROVISIONING CODES.

5-15. GENERAL. Provisioning codes assigned by the Air Force and Navy representatives are shown in the Air Force Source Code and Repair Code columns, and in the Navy Source Code and Recoverability Code columns of the Numerical Index.

5-16. AIR FORCE SOURCE CODES AND DEFINITIONS.

5-17. "P" SERIES - PARTS PROCURED AND UNDER INVENTORY STOCK CONTROL.

a. Code "P" identifies parts which may be requisitioned and installed by any level of maintenance consistent with the activity's authorized scope of maintenance. Code "P" is applied to parts on which usage is anticipated or known. Restricted (emergency) service manufacture of code "P" items is considered practical but may be accomplished only after confirmation of non-availability from supply sources.

b. Code "PD" identifies parts which may be requisitioned and installed by AF activities authorized depot-level maintenance only. Code "PD" is applied to parts on which usage is anticipated or known. Restricted (emergency) service manufacture of code "PD" is considered practical but may be accomplished only after confirmation of non-availability from supply sources.

c. Code "P1" identifies parts which may be requisitioned and installed by any maintenance level consistent with the activity's authorized scope of maintenance. Code "P1" is applied to parts on which usage is anticipated or known, and which service manufacture is considered impractical.

d. Code "P1D" identifies parts which may be requisitioned and installed by AF activities authorized depot-level maintenance only. Code "P1D" is applied to parts on which usage is anticipated or known, and which service manufacture is considered impractical.

e. Code "P2" identifies insurance-type spare parts which can be installed by an AF activity consistent with the activity's authorized scope of maintenance. This code is applied to such parts as are basically structural items of very limited usage, require special tools, templates, and/or jigs, and are very difficult, impractical, or uneconomical to manufacture by AF activities. These items are not subject to periodic replacement or wearout but may require infrequent replacement as a result of accidents or other unexpected occurrences. Delayed procurement items are included under this code.

f. Code "P2D" identifies insurance-type parts which may be installed by AF activities which are authorized depot-level maintenance only. This code is applied to parts as described under code "P2" and to delayed procurement items.

5-18. "M" SERIES - MANUFACTURE, PARTS NOT PROCURED.

a. Code "M" identifies parts, the manufacture and installation of which are within the capabilities of field maintenance activities; and to which all of the following conditions apply:

1. Procurement is not justified because of low usage or peculiar storage and installation factors. Needs are to be met by local manufacture only as required.

2. Their manufacture does not require tools, equipment or skills not normally authorized at field maintenance level.

3. Does not require test equipment not normally authorized at field maintenance level.

4. Does not require material not nor really available in AF inventory.

b. Code "M1" identifies parts which can be manufactured at activities authorized depot-level maintenance facilities and to which all of the following conditions apply:

1. Procurement is not justified because of low usage or peculiar storage and installation factors. The need of base activities are to be met by requisitioning from the geographical AMA, SSM, AMA, or IM AMA.

2. Their manufacture is beyond capabilities of field maintenance activities as outlined above.

3. Their manufacture does not requre tools or equipment not normally authorized at all AMAs.

5-19. "A" SERIES - ASSEMBLE, ASSEMBLE NOT PROCURED.

a. Code "A" identifies items capable of being assembled at any level of maintenance and is applied to assemblies of two or more parts, the majority of which are purchased and/or service manufactured.

b. Code "A1" identifies assemblies which can be assembled at AF activities authorized, depot-level maintenance only and is applied to assemblies described under "A" code.

5-20. "X" SERIES - PARTS CONSIDERED IMPRACTICAL FOR SERVICE MANUFACTURE.

a. Code "X" is applied to main structural members or similar parts, which, if required, would suggest extensive repair. The need for a part or parts coded "X" (wing spars, center section structure, etc.) should normally result in a recommendation to retire the article from service.

b. Code "X1" identifies parts applicable at any level of maintenance consistent with the activity's authorized scope of maintenance and for which it is more feasible to obtain the next higher assembly; for example, an integral detail part such as a welded segment inseparable from its assembly; a part machined in

a matched set; or a part of any assembly which, if required, would suggest extensive reconditioning of such assembly. In some cases, code "X1" may be used to indicate an integral detail part of an assembly which has no anticipated usage and as an assembly was source-coded "M" or "M1".

c. Code "X1D" identifies parts which are described under the "X1" code but which are applicable to AF activities authorized depot-level maintenance only.

d. Code "X2" identifies parts which are applicable to any level of maintenance consistent with the activity's authorized scope of maintenance, for which there is no anticipated usage, and which are impractical for service manufacture. This type of item will not be stocked. Such parts shall be obtained from reclamation or, if not available from this source, requisitioned through normal supply channels together with supporting justification for one-time procurement and immediate use. Repeated requests for such parts shall justify a change code "P1" or "P2" as applicable, if considered economical to procure and store such parts.

e. Code "X2D" identifies parts which are described under the "X2" code but which are applicable to AF activities authorized depot-level maintenance only. Repeated requests for such parts shall justify a change to a "P1D" or "P2D" code, as applicable, if considered economical and feasible to procure and stock such parts.

5-21. CODE "U" - PARTS NOT PROCURED, MANUFACTURED, OR STOCKED. Code "U" is applied to installation drawings, diagrams, instruction sheets, field-service drawing numbers, and parts not otherwise of supply significance, including obsolete parts, which cannot be procured or service manufactured.

5-22. MAINTENANCE REPAIR LEVEL CODES. The following are the maintenance repair level codes and their definitions:

a. CODE "S" - NO REPAIR Code "S" identifies items which are nonreparable and have no reclamation value. When these items fail they will be disposed of at user level as condemned material.

b. CODE "B" - NO REPAIR; RECONDITION. Code "B" identifies assemblies or parts that will be reconditioned at the user level by adjusting, cleaning, soldering broken connection, etc. If these items cannot be returned to serviceable condition by such means they will be disposed of at user level as condemned material. No repair parts or tools are specially procured for maintenance of these items.

c. CODE "F" - REPAIR AT FIELD LEVEL. Code "F" identifies items which will be repaired by the field level maintenance activities. Normal servicing will be done by organizational level maintenance. Selected parts, tools, and technical order data are procured and provided to applicable field level maintenance activities for repair of these items. No SRA is established for these items. If the condition of these items is such that they cannot be returned to serviceable condition by the field level maintenance activity with authorized parts and tools, they will be disposed of as condemned material. If repair of "F" coded items cannot be accomplished due to unavailability of authorized parts, tools, or other capability, the applicable SSM/IM will be so advised with request for disposition instructions. "F" coded Hi-Valu or Critical Items, regardless of condition, will be turned into supply for disposition instructions from the applicable SSM/IM.

d. CODE "D" - LIMITED FIELD REPAIR; DEPOT OVERHAUL Code "D" identifies items on which a limited degree of repair can be accomplished by field level maintenance activities. Normal servicing will be done at organizational level. SRA is established for overhaul of these items. A range of repair parts, tools, and technical order data consistent with the capability of repair are procured and provided to applicable field maintenance activities. Because of the design characteristics and complexity of repair, the degree of repair which is authorized on these items at the field maintenance level is necessarily determined by the degree of technical skills required and the cost of special tools, special test equipment, spare parts, and the predicted frequency of failure generation. If these items cannot be returned to serviceable condition with authorized parts and tools they will be returned to supply for shipment to the designated SRA.

e. CODE "DM" - LIMITED FIELD REPAIR; MOBILE DEPOT OVERHAUL Code "DM" identifies items to which all the conditions of code "D" apply except that repair beyond field capability will be done by the mobile depot activity (MDA). If the MDA cannot repair these items, they will determine whether these items should be condemned or sent to the SRA.

f. CODE "L" - DEPOT LEVEL MAINTENANCE ONLY. Code "L" identifies items that will be repaired only at designated SRA. Repair parts and tools for repair are procured and provided only to these authorized activities. Required functional checkout and bench check equipment may be provided to applicable organizational and field level maintenance activities for accomplishing external adjustment or calibration and for verifying serviceability of these items. If they are found unserviceable they will be turned in to supply for shipment to the SRA.

g. CODE "LM" - DEPOT LEVEL MAINTENANCE ONLY; MOBILE DEPOT ACTIVITY. Code "LM" identifies items to which all conditions of Code "L" apply except that repair will be accomplished by MDA. If MDA cannot repair these items, they will determine whether these items should be condemned or sent to the SRA.

5-23. NAVY SOURCE CODES AND DEFINITIONS.

5-24. P SERIES - PURCHASED ITEMS.

a. P - Applied to items which are purchased in view of known or anticipated usage and which are relatively simple to manufacture within the Navy if necessary.

b. P1 - Applied to items which are purchased in view of known or anticipated usage and which are difficult, impractical, or uneconomical to manufacture within the Navy.

c. P2 - Applied to items for which little usage is anticipated, but which are purchased in limited quantity for insurance purposes. Items coded "P2" are difficult to manufacture, require special tooling or stock not normally available within the Naval Establishment or require long production lead time.

d. P3 - Applied to repair parts items which are purchased in limited quantity in accordance with life expectancy. Items coded "P3" are normally deteriorative in nature and may require special storage conditions.

e. P4 - Applied to items which are procured only for initial outfitting or for special control and not carried in system stock for replenishment purposes.

5-25. M SERIES - MANUFACTURED ITEMS WHICH ARE NOT PURCHASED OR STOCK NUMBERED.

a. MF - Applied to items which are capable of being manufactured within Fleet activities. Items coded "MF" have no anticipated usage, or possess restrictive installation or storage factors. Code "MF" will not be applied to an item when the same item is coded in the 'T" series for other applications or the item is carried in the Navy Supply System. With respect to support equipment, the naval manufacturing activity may later alter the design of Source Codes "MF" material and/or processes provided that fit, function, use and safety are not impaired.

b. MO - Applied to items which are capable of being manufactured within overhaul/rework activities. Items coded "MO" have no anticipated or relatively low usage, or possess restrictive installation or storage factors or are manufactured more economically by the Government. Code "MO" will not be applied to an item when the same item is coded in the "P" series for other application or the item is carried in the Navy Supply System. With respect to support equipment, the naval manufacturing activity may alter the design of Source Code "MC" material and/or processes provided that its function, use and safety are not impaired.

c. MOA - Applied to items to be manufactured by the prime overhaul/rework point when required.

5-20. A SERIES - ASSEMBLE - ASSEMBLY NOT PURCHASED.

a. AF - Applied to assemblies which are not purchased but which are to be assembled within activities prior to installation. At least one of the items in the assembly must be a coded "P" item which carries an inidividual part number and description.

b. AO - Applied to assemblies which are not purchased but which are to be assembled within overhaul/rework activities prior to installation. At least one of the items in the assembly must be a coded "P" series item which carries an individual part number and description.

c. AOA - Applied to items to be assembled by the prime overhaul/rework point when required.

5-27. N SERIES - NOT STOCKED NORMALLY - WILL BE PURCHASED ON DEMAND.

a. N - Applied to items which do not meet established criteria for stocking and which are readily available from commercial sources, i.e., nuts, bolts, screws, washers, shims, rivets, knobs, cotter pins (not included in the Navy Supply System), protective closures, bead chains, adhesives, and cabinet locks.

b. N1 - Applied to Bureau of Yards and Docks Supply Office ("Y") cognizance items under fraction code "A" which are: (1) commerically available to all continental United States activities, (2) authorized for local stocking at the retail level, (3) replenished by local purchase within the continental United States, (4) carried in wholesale stock only for overseas and fleet activities, and (5) stock numbered and published in the Navy Stock List of the Yards and Docks Supply Office.

5-28. X SERIES - NOT PROCURED, NORMALLY IMPRACTICAL FOR STOCKING, MAINTENANCE OR MANUFACTURE.

a. X - Applied to items which, if damaged, would require uneconomical repair. The need for an item, or items coded "X" will normally result in recommendation for retirement of equipment from service.

b. X1 - Applied to items for which purchase of the next larger assembly Source Coded in the "P" series is justified.

c. X2 - Applied to items which are not purchased for stock, but may be required for use through salvage or one time purchase. Activities requiring such items will attempt to obtain them from salvage; if not obtainable from salvage or readily manufactured, such items shall be requisitioned through normal supply channels with supporting justification. Repeated requisitions shall justify a change to the "P" series code.

5-29. U SERIES - U - APPLIED WHEN NOT OF SUPPLY OR MAINTENANCE STOCKING SIGNIFICANCE.

5-30. MATERIAL ACCOUNTABILITY RECOVERABILITY CODES (MARC). Codes which are assigned only to aeronautical provisioned items to reflect the accountability, recoverability and repair policy determined for an item of equipment or material required for the maintenance, repair or rework of an end article, MARC codes are as follows:

Code Application of Accountability/Recoverability Codes

R Code "R" shall be applied to reparable (except end items of support equipment) items which are economical and practical to repair on a programmed basis through a major rework activity. It is intended that Code "R" items be repaired locally by using activities or fleet support activities whenever the extent of required repair falls within the maintenance capability of the local command. However the decision that the maintenance characteristics of the item are such as to warrant repair programming at a major military or commercial rework activity shall be the governing criteria for assignment of the "R" code. After initial outfitting, supply system issues of Code "R" items shall be made only when exchange procedures provide for turn-in of the replaced item or when necessary to replace an item expended by approved survey.

D Code "D" shall be applied to end items of support equipment which are economical and practical to repair on a scheduled basis through a major rework activity. Code "D" items will be maintained on a custodial signature basis and shall be surveyed when lost or missing or when beyond economical repair. After initial outfitting, the supply officer of the support activity will not issue Code "D'" end items without turn-in of the replaced item. Code "D" items shall be repaired by fleet support activities, including Public Works Departments, when the extent and type of repair fall within assigned maintenance responsibility. Every effort shall be made to repair items locally or through fleet support activities prior to turning the item into the supply system as non-RFI material. If repairs are required beyond local or fleet support maintenance capabilities, the damaged or defective material must be properly identified and returned immediately to the supporting supply department.

L Code "L" shall be applied to repairable items (except end items of support equipment) which are to be repaired locally by using activities or the local fleet support activity within their assigned maintenance responsibility. Repair parts are normally procured to support Code " L" items. Code "L" items will be scrapped when beyond local economical repair. After initial outfitting, supply system issues of Code "L" items shall be made only when exchange procedures provide for turn-in of the replaced item or when necessary to replace an item expended by approved survey.

E Code "E" shall be applied to end items of support equipment which are to be repaired locally. The criterion for assignment of Code "E" is that the end item can be maintained/repaired locally by using or fleet supporting activities within their assigned maintenance responsibility. Code "E" items will be maintained on a custodial signature basis when in use and will be surveyed when lost or missing. After initial outfitting the Supply Officer of the supporting activity will not issue Code "E" items without turn-in of the replaced item. If the repair of Code "E" items is beyond the assigned maintenance responsibility of the using activity, the next higher level of fleet maintenance shall be requested to perform repair. Operating procedures shall be set up locally with sufficient flexibility to allow for local repair and to encourage such action. If repair cannot be accomplished by local or supporting fleet levels of maintenance, including the Public Works Department, the cognizant BUWEPSFLEREADREP shall be immediately notified and will provide assistance regarding repair. The cognizant BUWEPSFLEREADREP may authorize repair through customer service from a major rework activity. If repair of Code "E" Items cannot be accomplished locally or through customer service in time to meet operational maintenance requirements, a ready-for-issue replacement item may be requisitioned. The Code "E" item requiring repair beyond the capability of the highest level of fleet maintenance must be appropriately tagged and turned into supply at the time of issue of the replacement item. The

Supply Officer shall promptly notify the cognizant BUWEPSFLEREADREP who will provide for screening and disposition. The item requiring repair will be screened by the cognizant BUWEPSFLEREADREP and authorized for transfer to a major rework activity for repair or will be designated for processing through normal supply procedures for appropriate disposal action.

B Code "B" shall be applied to items which are consumable for expendable but require item for item exchange for issue after the initial outfitting. Such items may contain precious metals, may be highly pilferable or may be certain high-cost items.

C Code "C" shall be applied to items consumed or expended in use and do not require an item for item exchange.

5-31. HOW TO USE THIS PARTS LIST.

5-32. To find the part number if the major assembly incorporating that part is known:

a. Locate the part and its corresponding index number in the appropriate illustration.

b. Find the corresponding index number in the Parts Listing to determine the part number and description.

5-33. VENDORS' CODES.

Code	Manufacturers' Names and Addresses
00779	AMP, Inc. P. O. Box 3608 Harrisburg, Pa. 17105
02660	Amphenol Corp. 2801 S. 25th Ave. Broadview, Ill. 60153
06229	Electrovert, Inc. 86 Hartford Ave. Mount Vernon, N. Y.
06540	Amatom Electronic Hardware Co., Inc. 432 Main Street New Rochelle, N. Y. 10801
07418	Sunbank Electronics, Inc. 2428 N. Ontario Burbank, Calif. 91504
09922	Burndy Corp. Richards Ave. Norwalk. Corm. 06852
11453	Precision Connectors, Inc. 88-06-T Van Wyck Expressway Jamaica, L.I., N.Y. 11418
24655	General Radio Co. 22 Baker Ave. West Concord, Mass. 01781
27191	Cutler-Hammer, Inc. Power Distribution and Control Division 4201 N. 27th Street Milwaukee, Wisconsin 53216
27197	Metermod Instrument Corp. 48-15 31st Ave. Long Island City, N. Y. 11103
46384	Penn Engineering and Mfg. Corp. Old Easton Highway Doylestown, Pa. 18901
56289	Sprague Electric Co. Marshall St. North Adams, Mass. 01247
61007	Tubular Rivet and Stud Div. Townsend Co. 530 West St. Braintree, Mass. 02185
70276	Allen Mfg. Co. Box 570 Hartford, Conn. 06101
71279	Cambridge Thermionic Corp. 445 Concord Ave. Cambridge, Mass. 02138
71468	ITT Cannon Electric, Inc. 3208 Humbolt St. Los Angeles, Calif. 90031
71785	Cinch Mfg. Co. and Howard B. Jones Division 1026 S. Homan Avenue Chicago, Illinois 60624
74193	Heinemann Electric Co. 2612 Brunswick Pike Trenton, N.J. 08602
77147	Patton MacGuyer Co. Edgewood station Providence, R.I, 02905
79963	Zierick Mfg. Corp. 83 Rockdale Ave. New Rochelle, N.Y. 10802

Code	Manufacturers' Names and Addresses
80205	National Aerospace Standards Committee Aeronautical Industries Association of America Washington, D.C.
81312	Winchester Electronics Division Litton Industries, Inc. Main St. and Hillside Ave. Oakville, Conn.
81349	Military Specifications Promulgated by Standardization Division Directorate of Logistic Services DSA
88044	Aeronautical Standards Group Dept. of Navy and Air Force
95238	Continental Connector Corp. 34-63 56th St. Woodside, N.Y. 11377
96906	Military Standards Promulgated by Standardization Division Directorate of Logistic Services D S A
98278	Microdot, Inc. 220 Pasadena Ave. South Pasadena, Calif. 91030
98376	Zero Mfg. Co. West Division 1121 Chestnut St. Burbank, Calif. 91503

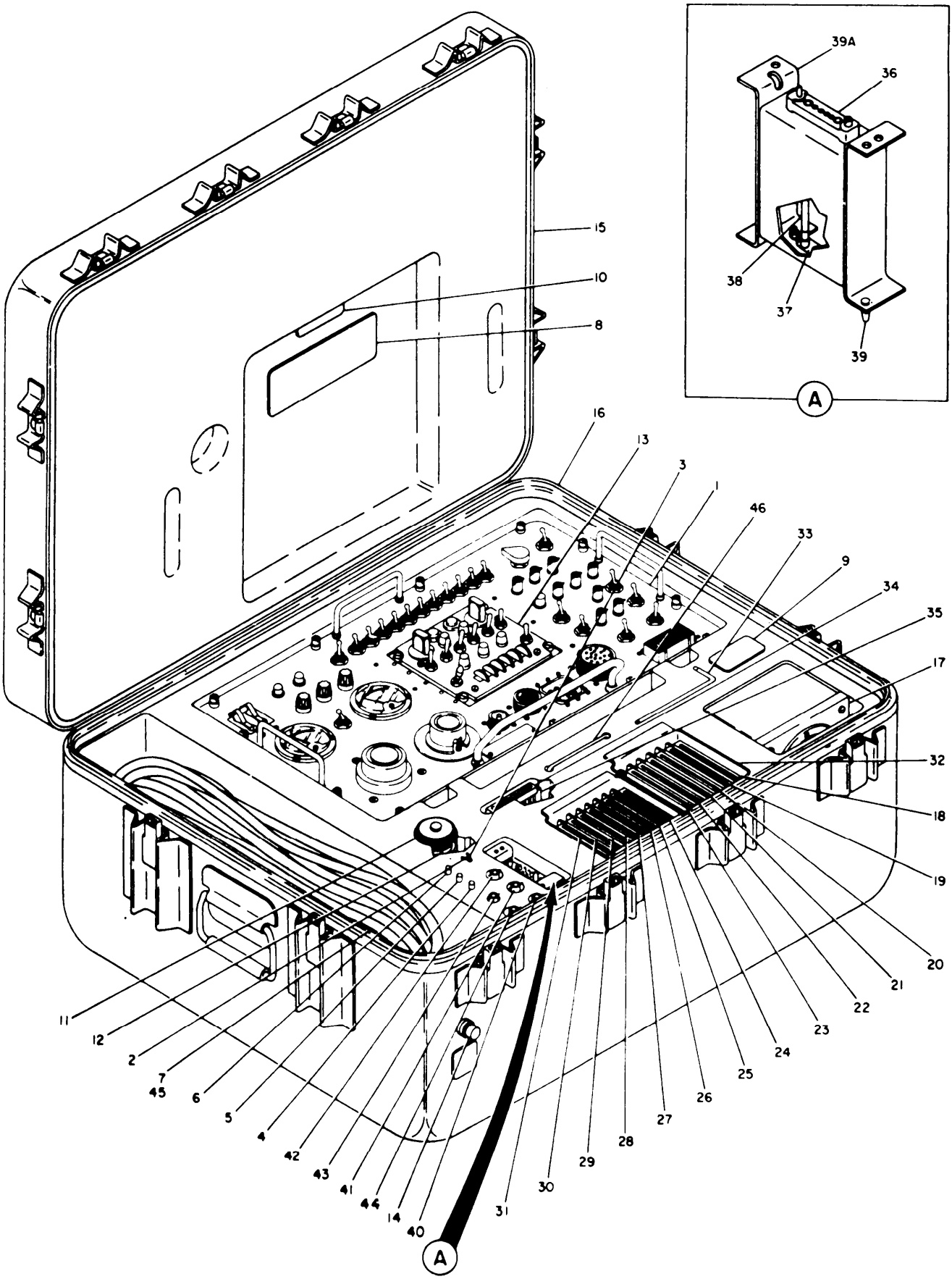

Figure 5-1. Test Set Assembly

FIG. & INDEX NO.	PART NO.	PART NAME (NOMENCLATURE OR DESCRIPTION) 1 2 3 4 5 6 7	USABLE ON CODE
5-1-	119065-1	TEST SET ASSY	A
5-1-	119065-2	TEST SET ASSY	B
5-1-	119065-3	TEST SET ASSY	C
5-1-	119598-1	. TEST SET, AN/APM-239A	
-1	119066-1	. . TEST SET, Transponder Set, TS-2681/APM-239A (See figure 5-2 for detail breakdown)	
-2	564F4	. . KEY, Socket (70276) (880000-03)	
-3	332F4	. . KEY, Socket (70276) (880000-04)	
-4	F03A250V10A	. . FUSE, Cartridge (81349)	
-5	F02A250V1/2A	. . FUSE, Cartridge (81349)	
-6	F02A250V2A	. . FUSE, Cartridge (81349)	
-7	119058-1	. . CABLE ASSY, Power, Electrical, CX-10926/APM-239A (See figure 5-10 for detail breakdown)	
-8	651018	. . PLATE, Identification	
-9	651014-1	. . PLATE, Identification	
-10	651014-3	. . PLATE, Identification	
5-1-	119145-1	. . CONNECTOR ASSY, Shorting	
-11	025-0500-000	. . . CAP, Protective (71468) (410127-1)	
-12	MS3106A28-21P	. . . CONNECTOR, Receptacle, electrical (96906)	
-13	C-6280( )(P)/ APX	. . CONTROL, Transponder set (GFE)	
5-1-	360087	. . CASE, Test Set, CY-6477/APM-239A	
-14	ZSP6-602	. . . VALVE, Relief (98376)	
-15	360087-2	. . . COVER ASSY, Transit test set and accessories	
-16	360087-1	. . . CASE	
-17	119052-1	. MULTIMETER, ME-358/APM-239A (see figure 5-5 for detail breakdown)	A, C
-18	119165-2	. ADAPTER, Test, MX-8203/APM-239A (See figure 5-6 for detail breakdown)	A, C
-19	119198-2	. ADAPTER, Test, MX-8207/APM-239A (See figure 5-6 for detail breakdown)	
-20	119165-1	. ADAPTER, Test, MX-8202/APM-239A (See figure 5-6 for detail breakdown)	
-21	119165-4	. ADAPTER, Test, MX-8205/APM-239A (See figure 5-6 for detail breakdown)	
-22	119198-1	. ADAPTER, Test, MX-8206/APM-239A (See figure 5-6 for detail breakdown)	
-23	119165-3	. ADAPTER, Test, MX-8204/APM-239A (See figure 5-6 for detail breakdown)	
-24	119143-1	. EXTENDER BOARD, Circuit Card Assy, MX-8141/APM-239A (See figure 5-7 for detail breakdown)	A, C
-25	119143-2	. EXTENDER BOARD, Circuit Card Assy, MX-8142/APM-239A (See figure 5-7 for detail breakdown)	A, C
-26	119143-3	. EXTENDER BOARD, Circuit Card Assy, MX-8143/APM-239A (See figure 5-7 for detail breakdown)	A, C
-27	119143-4	. EXTENDER BOARD, Circuit Card Assy, MX-8144/APM-239A (See figure 5-7 for detail breakdown)	A, C
-28	119143-5	. EXTENDER BOARD, Circuit Card Assy, MX-8145/APM-239A (See figure 5-7 for detail breakdown)	A, C
-29	119143-6	. EXTENDER BOARD, Circuit Card Assy, MX-8146/APM-239A (See figure 5-7 for detail breakdown)	A, C
-30	119143-7	. EXTENDER BOARD, Circuit Card Assy, MX-8147/APM-239A (See figure 5-7 for detail breakdown)	A, C

FIG. & INDEX NO.	PART NO.	PART NAME (NOMENCLATURE OR DESCRIPTION) 1 2 3 4 5 6 7	USABLE ON CODE
5-1-31	119143-8	. EXTENDER BOARD, Circuit Card Assy, MX-8148/APM-239A (See figure 5-7 for detail breakdown)	A,C
-32	119155-1	. HOLDER, Card	
-33	880177	. TOOL, Extraction, connector	
5-1-	113612-1	. EXTENDER BOARD, Circuit Card Assy, MX-8140/APM-239A	A,C
-34	350406-12R	. . CONNECTOR, Receptacle, electrical	A,C
-35	863601-1	. . PRINTED WIRING BOARD	A,C
5-1-	119142-1	. FRAME ASSY, Extension	A,C
-36	101056-04	. . CONNECTOR, Plug, electrical	A,C
-37	101056-06	. . CONNECTOR, Plug, electrical	A,C
-38	RG-187A/U	. . CABLE, Radio frequency (81349)	A,C
-39	751495	. . . PIN, Guide	A,C
-39A	No Number	. . . FRAME	A,C
5-1-	119141-1	. . FRAME, Extension	A,C
-40	UG-643/U	. ADAPTER, C to C (81349)	A,C
-41	UG-636A/U	. ADAPTER, C to BNC (81349)	A,B
-42	UG-201/U	. ADAPTER, N to BNC (81349)	
-43	033-0092-0001	. ADAPTER, Connector (98278) (350888-1)	A
-44	UG-309/U	. ADAPTER, HN to BNC (81349)	A
-45	119073-1	. CABLE ASSY, Special Purpose, Electrical, CX-10905/APM-239A (See figure 5-8 for detail breakdown)	
	119074-1	. CABLE ASSY, Special Purpose, Electrical CX-10906/APM-239A (See figure 5-9 for detail breakdown)	A
	119059-1	. CABLE ASSY, Special Purpose, Electrical, CX-10921/APM-239A (See figure 5-11 for detail breakdown)	A,C
	119061-1	. CABLE ASSY, Special Purpose, Electrical, CX-10922/APM-239A (See figure 5-12 for detail breakdown)	A,C
	119069-1	. CABLE ASSY, Special Purpose, Electrical, CX-10923/APM-239A (See figure 5-11 for detail breakdown)	A,C
	119068-1	. CABLE ASSY, Radio Frequency, CG-3491/ APM-239A (See figure 5-13 for detail breakdown)	A,C
	119062-1	. CABLE ASSY, Special Purpose, Electrical, CX-10924/APM-239A (See figure 5-14 for detail breakdown)	A,C
	119060-1	. CABLE ASSY, Special Purpose, Electrical, CX-10925/APM-239A (See figure 5-11 for detail breakdown)	A,C
	119076-1	. CABLE ASSY, Special Purpose, Electrical, CX-10908/APM-239A (See figure 5-15 for detail breakdown)	A,C
	119077-1	. CABLE ASSY, Special Purpose, Electrical, CX-10909/APM-239A (See figure 5-16 for detail breakdown)	
	119078-1	. CABLE ASSY, Special Purpose, Electrical, CX-10907/APM-239A (See figure 5-17 for detail breakdown)	B
	119079-1	. CABLE ASSY, Special Purpose, Electrical, CX-10910/APM-239A (See figure 5-18 for detail breakdown)	B

FIG. & INDEX NO.	PART NO.	PART NAME (NOMENCLATURE OR DESCRIPTION) 1 2 3 4 5 6 7	USABLE ON CODE
5-1-45	119080-1	. CABLE ASSY, Special Purpose, Electrical, CX-10911/APM-239A (See figure 5-16 for detail breakdown)	A, C
	119081-1	. CABLE ASSY, Special Purpose, Electrical, CX-10912/APM-239A (See figure 5-16 for detail breakdown)	A, C
	119162-1	. CABLE ASSY, Special Purpose, Electrical, CG-3470/APM-239A (See figure 5-19 for detail breakdown)	
	119163-1	. CABLE ASSY, Special Purpose, Electrical, CX-11734/APM-239A (See figure 5-12 for detail breakdown)	
	119163-2	. CABLE ASSY, Special Purpose, Electrical, CX-11735/APM-239A (See figure 5-12 for detail breakdown)	
-46	880007	. TOOL, Board puller	
5-2-	119066-1	TEST SET, Transponder Set, TS-2681/APM-239A (See figure 5-1-1 for NHA)	
-1	119067-1	. PANEL ASSY, (See figure 5-3 for detail breakdown)	
-2	890360	. TRANSFORMER, Power	
-3	MS351958-64	. SCREW (96906)	
-4	MS15795-808	. WASHER, Flat (96906)	
-5	191P22492T16	. CAPACITOR, Fixed, paper, 0.22 uf, ±10%, 200 vdcw (56289) (270288-1)	
-6	JAN1N1202	. SEMICONDUCTOR DEVICE, Diode (81349)	
-7	NAS671C10	. NUT (80205)	
-8	MS35338-138	. WASHER, Lock (96906)	
-9	930129-8	. WASHER, Nonmetallic	
-10	930120-2	. WASHER, Nonmetallic	
-11	MS35431-8	. TERMINAL, Lug (96906)	
-12	690273	. INDUCTOR	
-13	MS51958-64	. SCREW (96906)	
-14	MS15795-808	. WASHER, Flat (96906)	
-15	HP-3N	. CLAMP, Loop (09922) (ST310002-03)	
-16	HP-4N	. CLAMP, Loop (09922) (ST310002-04)	
-17	MS51957-29	. SCREW (96906)	
-18	MS35338-136	. WASHER, Lock (96906)	
-19	MS15795-805	. WASHER, Flat (96906)	
-20	MS16210-3	. NUT (96906)	
5-2-	962723-1	. WIRING HARNESS ASSY, Power supply.	
-21	41842	. . TERMINAL, Lug (00779) (ST850007-1)	
-22	360088	. CASE	

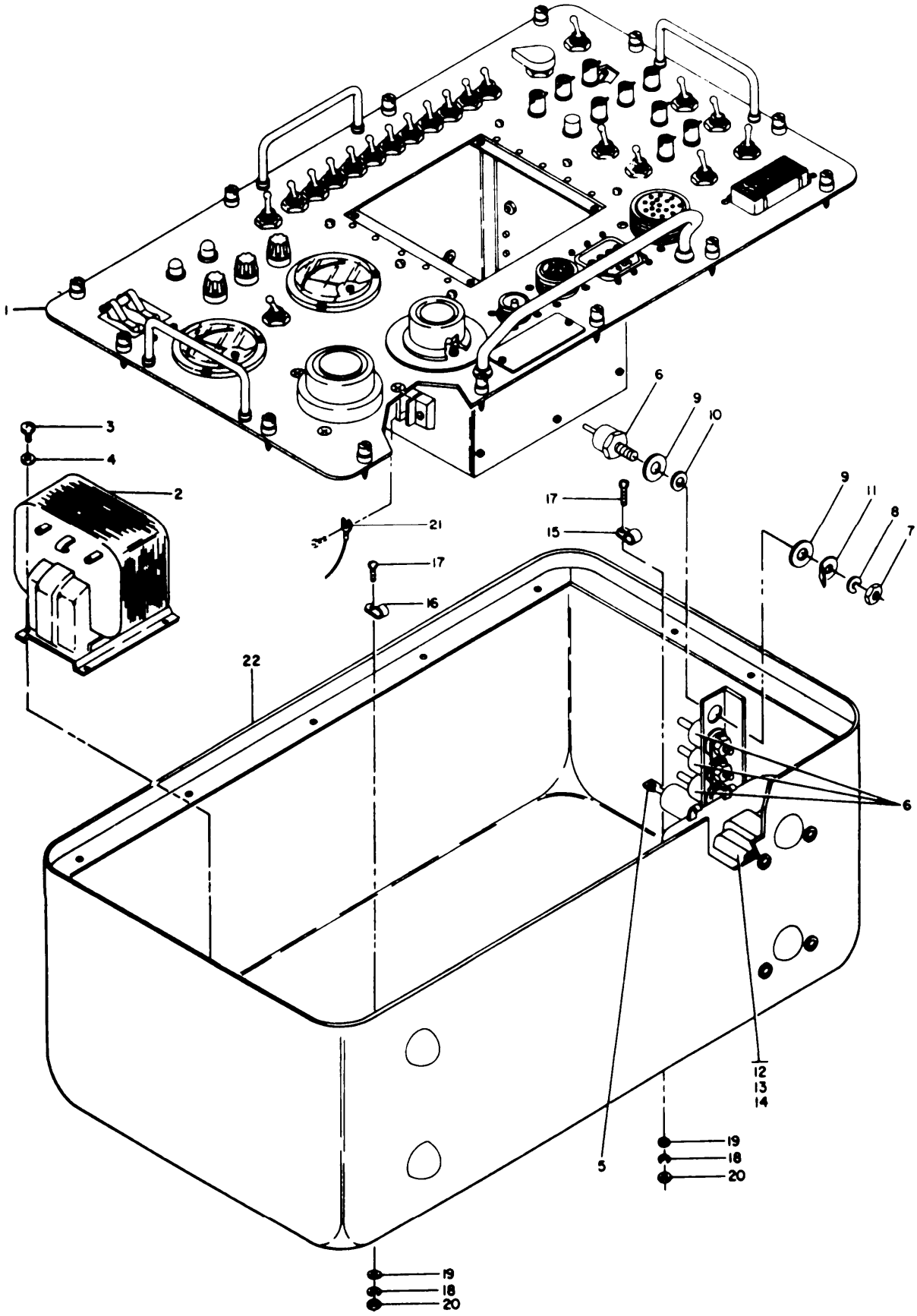

Figure 5-2. Transponder Set Test Set TS-2681/APM-239A

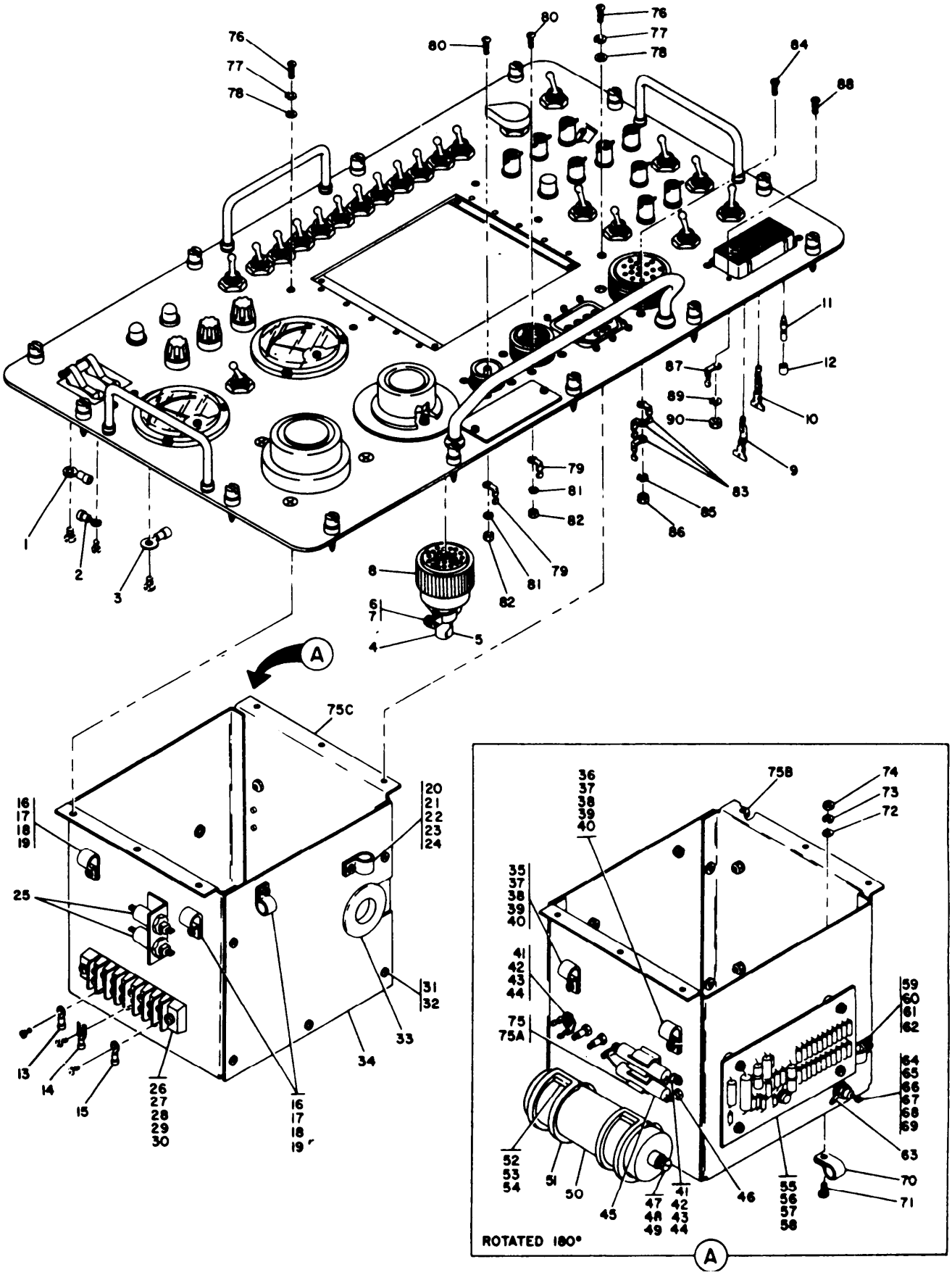

Figure 5-3. Panel Assembly (Sheet 1 of 2)

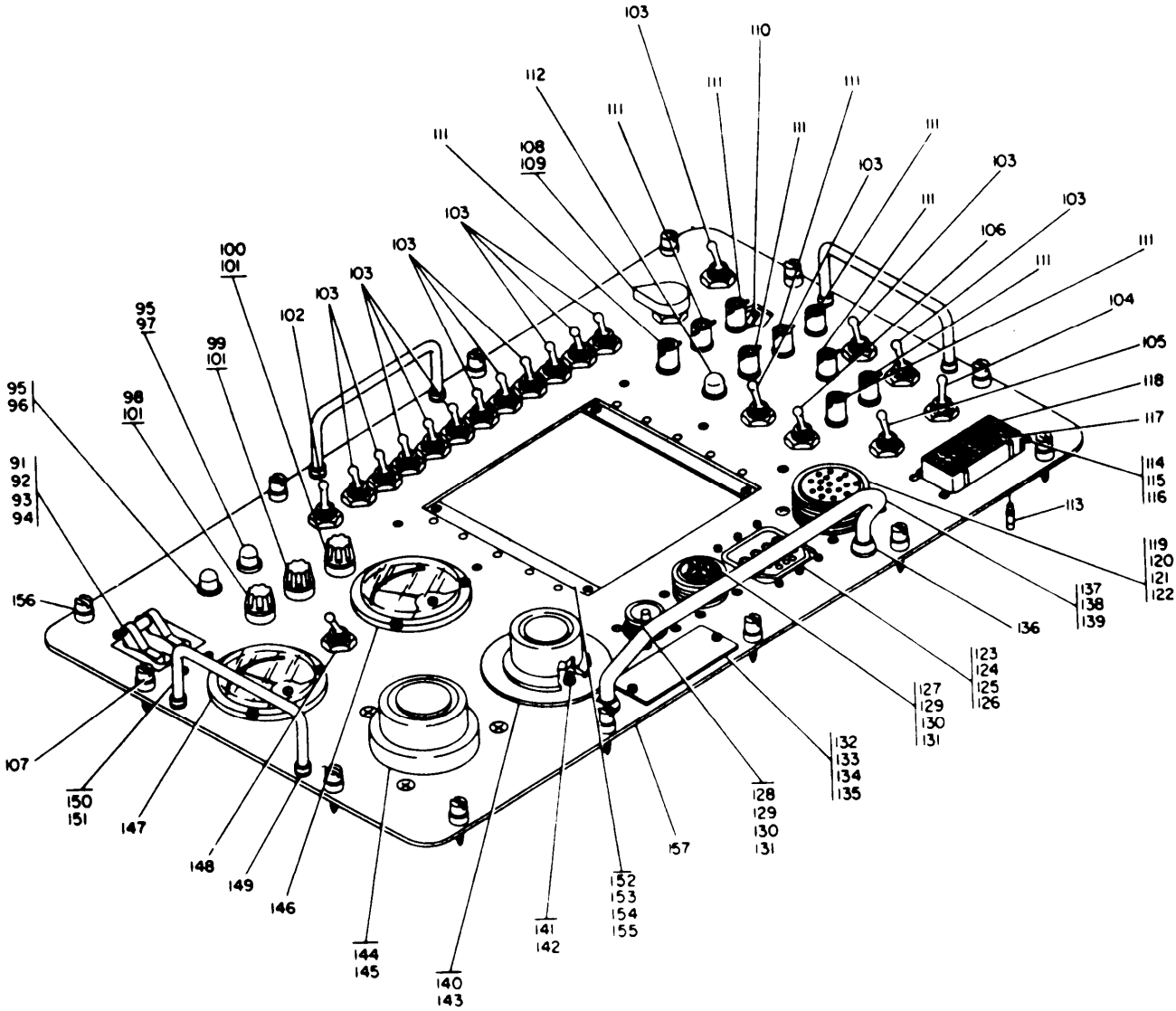

Figure 5-3. Panel Assembly (Sheet 2 of 2)

FIG. & INDEX NO.	PART NO.	PART NAME (NOMENCLATURE OR DESCRIPTION) 1 2 3 4 5 6 7	USABLE ON CODE
5-3-	119067-1	PANEL ASSY (See figure 5-2-1 for NHA)	
5-3-	962713-1	. WIRING HARNESS ASSY, Branched	
-1	MS25036-8	. . TERMINAL, Lug (96906)	
-2	MS25036-1	. . TERMINAL, Lug (96906)	
-3	MS25036-50	. . TERMINAL, Lug (96906)	
-4	AN3420-16A	. . BUSHING, Cable (88044)	
-5	AN3420-18A	. . BUSHING, Cable (88044)	
-6	MS51957-17	. . SCREW (96906)	
-7	MS35338-135	. . WASHER, Lock (96906)	
-8	MS24266R22B55S	. . CONNECTOR, Receptacle, electrical (96906)	
-9	66104-1	. . CONTACT, Electrical (00779) (350398-1)	

FIG. & INDEX NO.	PART NO.	PART NAME (NOMENCLATURE OR DESCRIPTION) 1 2 3 4 5 6 7	USABLE ON CODE
5-3-10	66100-1	. . CONTACT, Electrical (00779) (350398-7)	
-11	1-331950-0	. . SOCKET, Coaxicon connector, subminiature (00779) (350895-1)	
-12	1-332056-0	. . FERRULE, Coaxicon connector, subminiature (00779) (350893)	
-13	MS25036-3	. . TERMINAL, Lug (96906)	
-14	41842	. . TERMINAL, Lug (00779)	
-15	MS25036-6	. . TERMINAL, Lug (96906)	
-16	HP-6N	. CLAMP, Loop (09922) (ST310002-06)	
-17	MS51957-29	. SCREW (96906)	
-18	MS35338-136	. WASHER, Lock (96906)	
-19	MS16210-3	. NUT (96906)	
-20	HP-8N	. CLAMP, Loop (09922) (ST310002-08)	
-21	MS51957-29	. SCREW (96906)	
-22	MS35338-136	. WASHER, Lock (96906)	
-23	MS15795-805	. WASHER, Flat (96906)	
-24	MS16210-3	. NUT (96906)	
-25	CZ24BKF103	. CAPACITOR, Fixed, feedthru (81349)	
-26	8TB8	. TERMINAL BOARD (71785)	
-27	MS51957-47	. SCREW (96906)	
-28	MS35338-137	. WASHER, Lock (96906)	
-29	MS15795-807	. WASHER, Flat (96906)	
-30	MS16210-4	. NUT (96906)	
-31	MS51957-27	. SCREW (96906)	
-32	MS35338-136	. WASHER, Lock (96906)	
5-3-	119106-1	. COVER ASSY	
-33	MS35489-135	. . GROMMET, Rubber (96906)	
-34	119106P1	. . COVER	
-35	HP-9N	. CLAMP, Loop (09922) (ST310002-09)	
-36	HP-8N	. CLAMP, Loop (09922) (ST310002-08)	
-37	MS51957-29	. SCREW (96906)	
-38	MS35338-136	. WASHER, Lock (96906)	
-39	MS15795-805	. WASHER, Flat (96906)	
-40	MS16210-3	. NUT (96906)	
-41	147-#6-.032 -BRASS-H. T.	. TERMINAL, Lug (79963) (ST850064-02)	
-42	MS51957-29	. SCREW (96906)	
-43	MS35338-136	. WASHER, Lock (96906)	
-44	MS16210-3	. NUT (96906)	
-45	RW68V270	. RESISTOR, Fixed, wirewound (81349)	
-46	SE099E02	. TERMINAL, Standoff (81349)	
-47	MS51958-60	. SCREW (96906)	
-48	MS35338-138	. WASHER, Lock (96906)	
-49	MS15795-808	. WASHER, Flat (96906)	
-50	CE71C701H	. CAPACITOR, Fixed, electrolytic (81349)	
-51	N5	. STRAP, Retaining (06229) (310159-13)	
-52	C3-M	. STRAP, Retaining (06229) (310159-6)	
-53	MS51957-26	. SCREW (96906)	
-54	MS35338-136	. WASHER, Lock (96906)	
-55	119064-1	. BOARD ASSY (See figure 5-4 for detail breakdown)	
-56	MS51957-32	. SCREW (96906)	
-57	MS35338-136	. WASHER, Lock (96906)	
-58	MS15795-805	. WASHER, Flat (96906)	
-59	HP-6N	. CLAMP, Loop (09922) (ST310002-06)	
-60	MS51957-29	. SCREW (96906)	
-61	MS35338-136	. WASHER, Lock (96906)	
-62	MS16210-3	. NUT (96906)	
-63	MS35431-8	. TERMINAL, Lug (96906)	
-64	JAN1N2982B	. SEMICONDUCTOR DEVICE, Diode (81349)	

FIG. & INDEX NO.	PART NO.	PART NAME (NOMENCLATURE OR DESCRIPTION) 1 2 3 4 5 6 7	USABLE ON CODE
5-3-65	NAS671C10	. NUT (80205)	
-66	MS35338-138	. WASHER, Lock (96906)	
-67	MS15795-808	. WASHER, Flat (96906)	
-68	930129-8	. WASHER, Nonmetallic	
-69	930120-2	. WASHER, Nonmetallic	
-70	HP-3N	. CLAMP, Loop (09922) (ST310002-03)	
-71	MS51957-29	. SCREW (96906)	
-72	MS15795-805	. WASHER, Flat (96906)	
-73	MS35338-136	. WASHER, Lock (96906)	
-74	MS16210-3	. NUT (96906)	
5-3-	119095-1	. CHASSIS	
-75	MS28136-4	. . CLIP, Spring tension (96906)	
-75A	20196-8	. . RIVET, Tubular (61007) (ST390471-8)	
-75B	CLS632-2	. . NUT, Self-clinching (46384) (ST660124-8)	
-75C	No Number	. . CHASSIS	
-76	MS51957-29	. SCREW (96906)	
-77	MS35338-136	. WASHER, Lock (96906)	
-78	MS15795-805	. WASHER, Flat (96906)	
-79	147-#4-.032 -BRASS-H. T.	. TERMINAL, Lug (79963) (ST850064-01)	
-80	MS51957-16	. SCREW (96906)	
-81	MS35338-135	. WASHER, Lock (96906)	
-82	MS16210-2	. NUT (96906)	
-83	147-#6-.032 -BRASS-H. T.	. TERMINAL, Lug (79963) (ST850064-02)	
-84	MS51957-30	. SCREW (96906)	
-85	MS35338-136	. WASHER, Lock (96906)	
-86	MS16210-3	. NUT (96906)	
-87	147-#4-.032 -BRASS-H. T.	. TERMINAL, Lug (79963) (ST850064-01)	
-88	MS51957-16	. SCREW (96906)	
-89	MS35338-135	. WASHER, Lock (96906)	
-90	MS16210-2	. NUT (96906)	
-91	PAM33-MG6-6-250VAC-400CPS	. CIRCUIT BREAKER (74193) (841102-1)	
-92	MS51957-27	. SCREW (96906)	
-93	MS35338-136	. WASHER, Lock (96906)	
-94	MS15795-805	. WASHER, Flat (96906)	
-95	MS25252-NE2D	. LAMP, Neon (96906)	
-96	LH74-LC13WT	. LAMPHOLDER, Indicator (81349)	
-97	LH74-LC13RN	. LAMPHOLDER, Indicator (81349)	
-98	F03A250V10A	. FUSE, Cartridge (81349)	
-99	F02A250V1/2A	. FUSE, Cartridge (81349)	
-100	F02A250V2A	. FUSE, Cartridge (81349)	
-101	FHN20G	. FUSEHOLDER, Non-indicating (81349)	
-102	MS25125D1	. SWITCH, Toggle (96906)	
-103	MS35058-23	. SWITCH, Toggle (96906) (ST840002-23)	
-104	MS25126C3	. SWITCH, Toggle (96906)	
-105	MS35059-21	. SWITCH, Toggle (96906) (ST840004-21)	
-106	MS35058-21	. SWITCH, Toggle (96906) (ST840002-21)	
-107	6108-SS-0832-7	. SCREW, Captive, panel (06540) (ST810659-21)	
-108	MS91528-2K4B	. KNOB (96906)	
-109	841104	. SWITCH, Rotary	
-110	850186-1	. TERMINAL, Lug	
-111	UG1094B/U	. CONNECTOR, Plug, electrical (81349)	
-112	MS25256-2-327	. LAMP, Incandescent (96906)	
-113	51609-1	. BUSHING, Coaxicon (00779)	
-114	MS51957-16	. SCREW (96906)	
-115	MS35338-135	. WASHER, Lock (96906)	

FIG. & INDEX NO.	PART NO.	PART NAME (NOMENCLATURE OR DESCRIPTION) 1 2 3 4 5 6 7	USABLE ON CODE
5-3-116	MS16210-2	. NUT (96906)	
5-3-	117547-6	. RECEPTACLE AND PLUG ASSY, Electrical connector	
-117	202651-2	. . BLOCK, Socket (00779) (681008)	
-118	202795-1	. . SHELL, Electrical connector (00779) (350382)	
-119	MS3102A28-21S	. CONNECTOR, Receptacle, electrical (96906)	
-120	MS51957-31	. SCREW (96906)	
-121	MS35338-136	. WASHER, Lock (96906)	
-122	MS16210-3	. NUT (96906)	
-123	94-52548-1	. CONNECTOR, Plug, electrical (02660) (350885-1)	
-124	MS51957-15	. SCREW (96906)	
-125	MS35338-135	. WASHER, Lock (96906)	
-126	MS15795-803	. WASHER, Flat (96906)	
-127	MS3102A20-27S	. CONNECTOR, Receptacle, electrical (96906)	
-128	MS3102A14S-1P	. CONNECTOR, Receptacle, electrical (96906)	
-129	MS51957-16	. SCREW (96906)	
-130	MS35338-135	. WASHER, Lock (96906)	
-131	MS15795-805	. WASHER, Flat (96906)	
-132	651014-2	. PLATE, Identification	
-133	MS51957-15	. SCREW (96906)	
-134	MS35338-135	. WASHER, Lock (96906)	
-135	MS16210-2	. NUT (96906)	
-136	340297-3	. FERRULE	
-137	410125	. HANDLE	
-138	MS51958-63	. SCREW (96906)	
-139	MS35338-138	. WASHER, Lock (96906)	
-140	890359-1	. TRANSFORMER, Variable, power	
-141	MS51957-13	. SCREW (96906)	
-142	MS35338-135	. WASHER, Lock (96906)	
-143	MS51960-65	. SCREW (96906)	
-144	890358-1	. TRANSFORMER, Variable, power	
-145	MS51960-65	. SCREW (96906)	
-146	610072	. METER, Amplifier	
-147	610071	. VOLTMETER	
-148	MS25068-23	. SWITCH, Toggle (96906) (ST840006-23)	
-149	1212-2	. FERRULE, Handle (71279) (310167-1)	
-150	1292-2	. HANDLE (71279) (410126-2)	
-151	MS51959-44	. SCREW (96906)	
5-3-	119057-1	. PANEL, Front	
-152	341082	. . RECEPTACLE STRIP	
-153	MS51959-16	. . SCREW (96906)	
-154	MS35338-135	. . WASHER, Lock (96906)	
-155	MS16210-2	. . NUT (96906)	
-156	6312CSS0832	. . NUT, Plain, clinch (06540) (ST660430-9)	
-157	119057P1	. . PANEL	
5-4-	119064-1	BOARD ASSY (See figure 5-3-55 for NHA)	
-1	RN70C1722D	. RESISTOR, Fixed, film (81349)	
-2	JAN1N486B	. SEMICONDUCTOR DEVICE, Diode (81349)	
-3	RW67G101	. RESISTOR, Fixed, wirewound (81349)	
-4	CS13BF336K	. CAPACITOR, Fixed, tantalum (81349)	
-5	2829-75-1	. STRAP, Rubber, capacitor mounting (98159) (ST310073-1)	
-6	JAN1N3611	. SEMICONDUCTOR DEVICE, Diode (81349)	
-7	RC20GF910J	. RESISTOR, Fixed, composition (81349)	
-8	RC20GF221J	. RESISTOR, Fixed, composition (81349)	
-9	RC32GF202J	. RESISTOR, Fixed, composition (81349)	
-10	JAN1N754A	. SEMICONDUCTOR DEVICE, Diode (81349)	

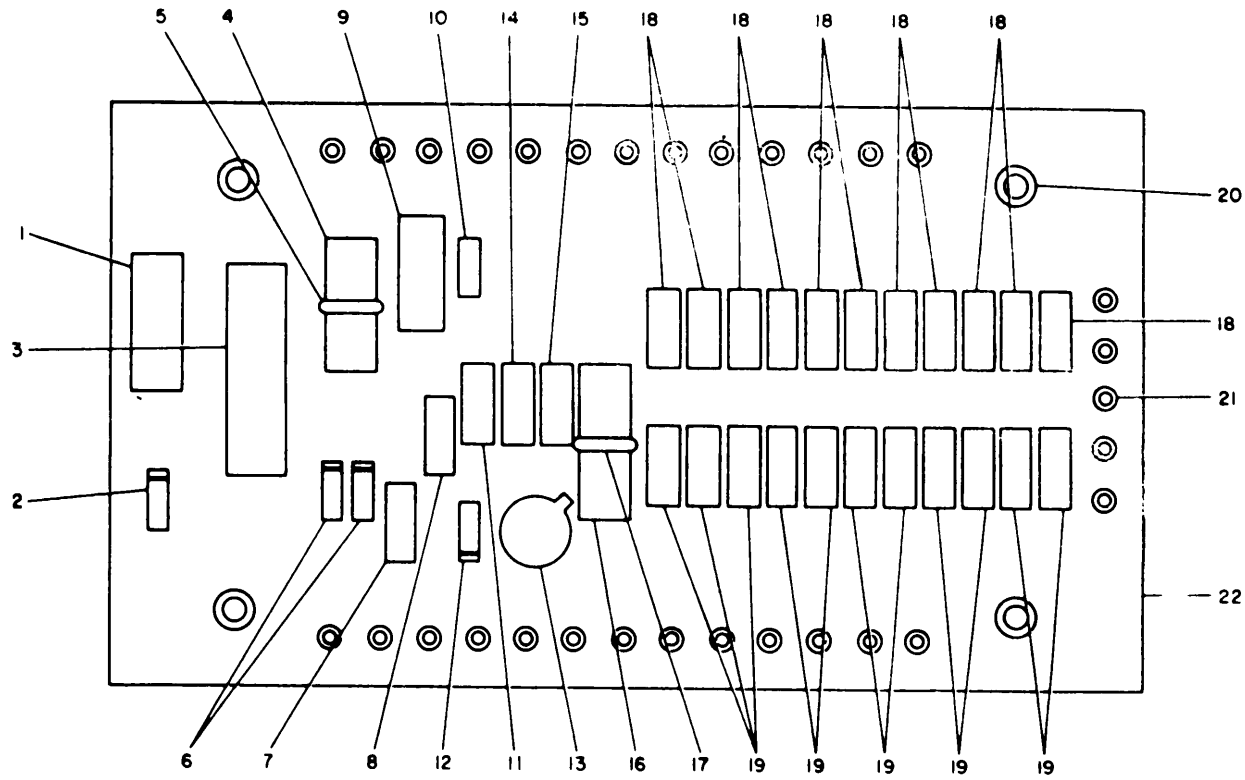

Figure 5-4. Board Assembly

FIG. & INDEX NO.	PART NO.	PART NAME (NOMENCLATURE OR DESCRIPTION) 1 2 3 4 5 6 7	USABLE ON CODE
5-4-11	RC20GF152J	. RESISTOR, Fixed, composition (81349)	
-12	JAN1N914	. SEMICONDUCTOR DEVICE, Diode (81349)	
-13	JAN2N2219A	. TRANSISTOR (81349)	
-14	RC20GF471J	. RESISTOR, Fixed, composition (81349)	
-15	CS13BC475K	. CAPACITOR, Fixed, tantalum (81349)	
-16	CS13BG226K	. CAPACITOR, Fixed, tantalum (81349)	
-17	ST310073-1	. STRAP, Rubber, capacitor mounting	
-18	RC20GF302J	. RESISTOR, Fixed, composition (81349)	
-19	RC20GF114J	. RESISTOR, Fixed, composition (81349)	
5-4-	119064-2	. PRINTED CIRCUIT BOARD	
-20	ST752895-112	. . SPACER, Sleeve	
-21	2034-2-05	. . TERMINAL, Stud (71279) (850334-2)	
-22	865778	. . PRINTED CIRCUIT BOARD	

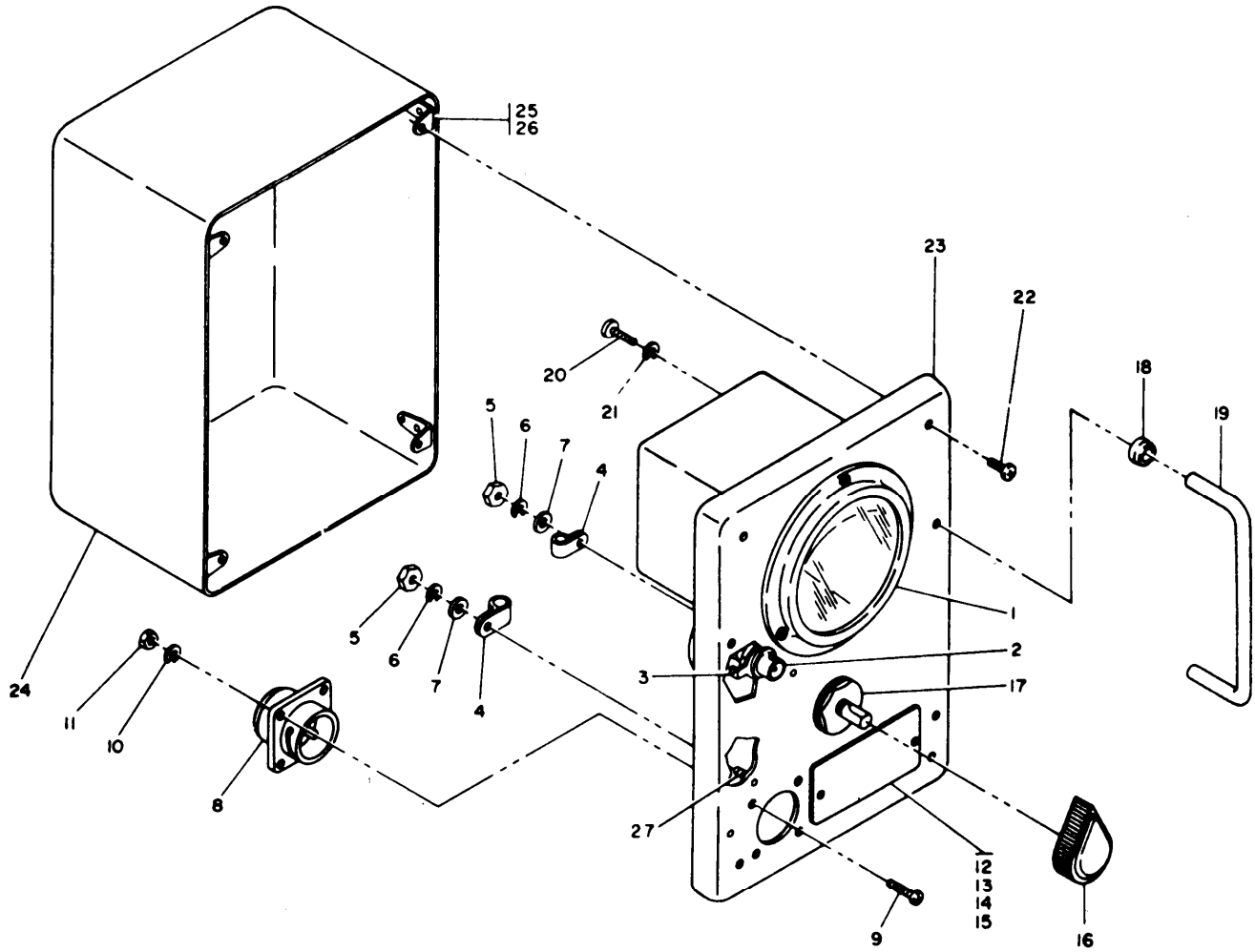

Figure 5-5. Multimeter, ME-358/APM-239A

FIG. & INDEX NO.	PART NO.	PART NAME (NOMENCLATURE OR DESCRIPTION) 1 2 3 4 5 6 7	USABLE ON CODE
5-5-	119052-1	MULTIMETER, ME-358/APM-239A (See figure 5-1-17 for NHA)	
-1	610073	. METER, Special (27197)	
-2	UG1094B/U	. CONNECTOR, Plug, electrical (81349)	
-3	850186-1	. TERMINAL, Lug	
-4	HP-4N	. CLAMP, Loop (09922) (310002-04)	
-5	MS16210-3	. NUT (96906)	
-6	MS35338-136	. WASHER, Lock (96906)	
-7	MS15795-805	. WASHER, Flat (96906)	
-8	MS3112E14-15P	. CONNECTOR, Receptacle, electrical (96906)	
-9	MS51957-14	. SCREW (96906)	
-10	MS35338-135	. WASHER, Lock (96906)	
-11	MS16210-2	. NUT (96906)	
-12	651013	. PLATE, Identification	
-13	MS51957-14	. SCREW (96906)	
-14	MS35338-135	. WASHER, Lock (96906)	

FIG. & INDEX NO.	PART NO.	PART NAME (NOMENCLATURE OR DESCRIPTION) 1 2 3 4 5 6 7	USABLE ON CODE
5-5-15	MS16210-2	. NUT (96906)	
-16	MS91528-2K2B	. KNOB (96906)	
-17	2H50A14-3-D06	. SWITCH, Rotary (27191) (841103-1)	
-18	1212-2	. FERRULE, Handle (71279) (310167-1)	
-19	1292-2	. HANDLE (71279) (410126-2)	
-20	MS51957-45	. SCREW (96906)	
-21	MS35338-137	. WASHER, Lock (96906)	
-22	MS51957-45	. SCREW (96906)	
5-5-	119050-1	. CASE ASSY, Meter	
-23	119050P2	. . PANEL	
-24	119050P1	. . CASE	
-25	AN256F8	. . NUT, Anchor (88044)	
-26	MS20426AD3-4	. . RIVET, Solid (96906)	
-27	751064-07	. . STUD, Self-clinching	

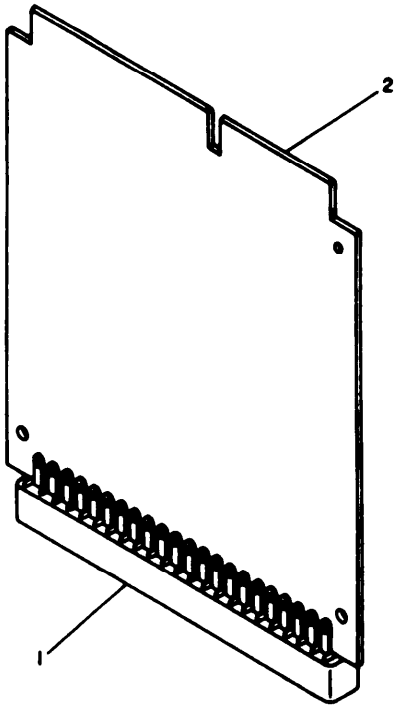

Figure 5-6. Test Adapters, MX-8202/APM-239A, MX-8203/APM-239A, MX-8204/APM-239A, MX-8205/APM-239A, MX-8206/APM-239A, MX-8207/APM-239A

FIG. & INDEX NO.	PART NO.	PART NAME (NOMENCLATURE OR DESCRIPTION) 1 2 3 4 5 6 7	USABLE ON CODE
5-6-	119165-1	ADAPTER, Test, MX-8202/APM-239A (See figure 5-1-20 for NHA)	A
5-6-	119165-2	ADAPTER, Test, MX-8203/APM-239A (See figure 5-1-18 for NHA)	B
5-6-	119165-3	ADAPTER, Test, MX-8204/APM-239A (See figure 5-1-23 for NHA)	C
5-6-	119165-4	ADAPTER, Test, MX-8205/APM-239A (See figure 5-1-21 for NHA)	D
5-6-	119198-1	ADAPTER, Test, MX-8206/APM-239A (See figure 5-1-22 for NHA)	E
5-6-	119198-2	ADAPTER, Test, MX-8207/APM-239A (See figure 5-1-19 for NHA)	F
-1	350406-13Y	. CONNECTOR, Receptacle, electrical	A
	350406-13P	. CONNECTOR, Receptacle, electrical	B
	350406-13H	. CONNECTOR, Receptacle, electrical	C
	350406-13E	. CONNECTOR, Receptacle, electrical	D
	350978-1	. CONNECTOR, Receptacle, electrical	E
	350978-2	. CONNECTOR, Receptacle, electrical	F
-2	865780-1	. PRINTED WIRING BOARD	A
	865780-2	. PRINTED WIRING BOARD	B
	865780-3	. PRINTED WIRING BOARD	C
	865780-4	. PRINTED WIRING BOARD	D
	865958-1	. PRINTED WIRING BOARD	E
	865958-2	. PRINTED WIRING BOARD	F

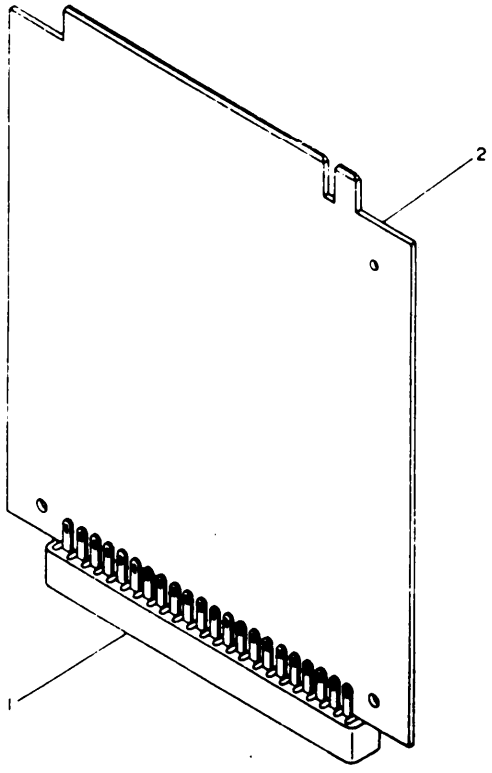

Figure 5-7. Circuit Card Assembly Extender Boards MX-8141/APM-239A, MX-8142/APM-239A, MX-8143/APM-239A, MX-8144/APM-239A, MX-8145/APM-239A, MX-8146/APM-239A, MX-8147/APM-239A, MX-8148/APM-239A

FIG. & INDEX NO.	PART NO.	PART NAME (NOMENCLATURE OR DESCRIPTION) 1 2 3 4 5 6 7	USABLE ON CODE
5-7-	119143-1	EXTENDER BOARD, Circuit Card Assy, MX-8141/APM-239A (See figure 5-1-24 for NHA)	A
5-7-	119143-2	EXTENDER BOARD, Circuit Card Assy, MX-8142/APM-239A (See figure 5-1-25 for NHA)	B
5-7-	119143-3	EXTENDER BOARD, Circuit Card Assy, MX-8143/APM-239A (See figure 5-1-26 for NHA)	C
5-7-	119143-4	EXTENDER BOARD, Circuit Card Assy, MX-8144/APM-239A (See figure 5-1-27 for NHA)	D
5-7-	119143-5	EXTENDER BOARD, Circuit Card Assy, MX-8145/APM-239A (See figure 5-1-28 for NHA)	E
5-7-	119143-6	EXTENDER BOARD, Circuit Card Assy, MX-8146/APM-239A (See figure 5-1-29 for NHA)	F
5-7-	119143-7	EXTENDER BOARD, Circuit Card Assy, MX-8147/APM-239A (See figure 5-1-30 for NHA)	G
5-7-	119143-8	EXTENDER BOARD, Circuit Card Assy, MX-8148/APM-239A (See figure 5-1-31 for NHA)	H
-1	350406-13M	. CONNECTOR, Receptacle, electrical	A
	350406-13U	. CONNECTOR, Receptacle, electrical	B
	350406-13V	. CONNECTOR, Receptacle, electrical	C
	350406-13K	. CONNECTOR, Receptacle, electrical	D
	350406-13C	. CONNECTOR, Receptacle, electrical	E
	350406-13S	. CONNECTOR, Receptacle, electrical	F
	350406-13Y	. CONNECTOR, Receptacle, electrical	G
	350406-13W	. CONNECTOR, Receptacle, electrical	H
-2	865972	. PRINTED WIRING BOARD	A
	865779-2	. PRINTED WIRING BOARD	B
	865779-3	. PRINTED WIRING BOARD	C
	865779-4	. PRINTED WIRING BOARD	D
	865779-5	. PRINTED WIRING BOARD	E
	865779-6	. PRINTED WIRING BOARD	F
	865779-7	. PRINTED WIRING BOARD	G
	865779-8	. PRINTED WIRING BOARD	H

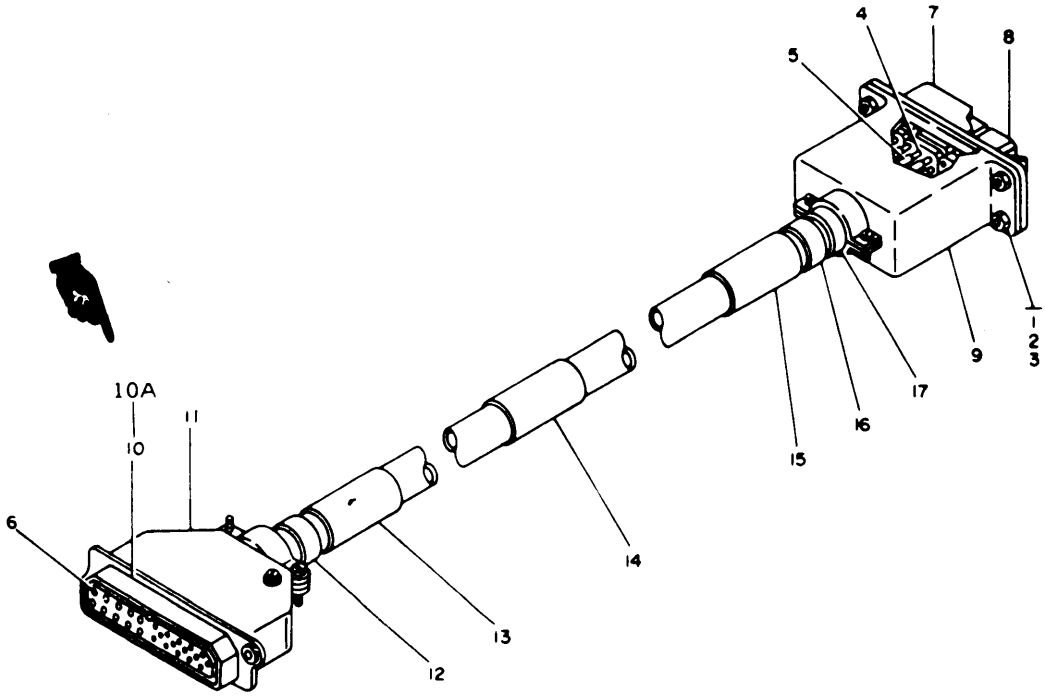

Figure 5-8. Electrical Special Purpose Cable Assembly, CX-10905/APM-239A

FIG. & INDEX NO.	PART NO.	PART NAME (NOMENCLATURE OR DESCRIPTION) 1 2 3 4 5 6 7	USABLE ON CODE
5-8-	119073-1	CABLE ASSY, Special Purpose, Electrical, CX-10905/ APM-239A (See figure 5-1-45 for NHA)	
-1	MS51957-16	. SCREW (96906)	
-2	MS35338-135	. WASHER, Lock (96906)	
-3	MS16210-2	. NUT (96906)	
5-8-	962704	. WIRE LIST	
-4	331952-0	. . CONTACT, Electrical (00779) (350894-1)	
-5	1-332056-0	. . FERRULE, Coaxicon connector (00779) (350893)	
-6	66102-1	. . CONTACT, Electrical (00779) (350399-1)	
5-8-	117547-5	. RECEPTACLE AND PLUG ASSY, Electrical connector	
-7	202287-1	. . SHELL, Electrical connector (00779) (350375)	
-8	202650-2	. . BLOCK, Pin (00779) (681007)	
-9	1-202301-0	. HOOD, Connector, clamping (00779) (310176-2)	
-10	DPJ(59C10)-34 S-H-A101	. CONNECTOR, Electrical (71468) (350130-08)	
-10A	249-1173-001	. CONTACTS, For # 9, 10, 11, 12, 13, 45, 46, 47, 49	
	031-0900-001	. CONTACTS, For all others	
-11	S428-1	. HOOD, Connector, clamping (07418) (310174-1)	
-12	651023-5	. MARKER	
-13	651023-23	. MARKER	
-14	651023-42	. MARKER	
-15	651023-1	. MARKER	
-16	651023-4	. MARKER	
-17	AN3420-16A	. BUSHING, Cable (88044)	

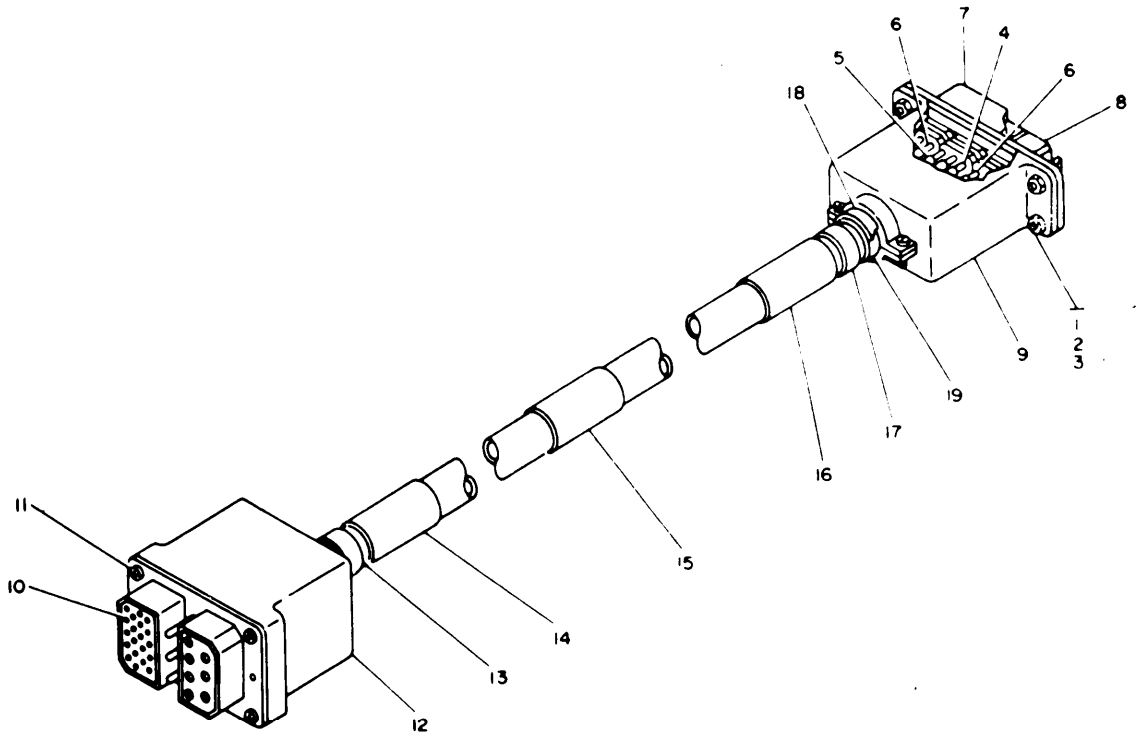

Figure 5-9. Electrical Special Purpose Cable Assembly, CX-10306/APM-239A

FIG. & INDEX NO.	PART NO.	PART NAME (NOMENCLATURE OR DESCRIPTION) 1 2 3 4 5 6 7	USABLE ON CODE
5-9-	119074-1	CABLE ASSY, Special Purpose, Electrical, CX-10906/ APM-239A (See figure 5-1-45 for NHA)	
-1	MS51957-16	. SCREW (96906)	
-2	MS35338-135	. WASHER, Lock (96906)	
-3	MS16210-2	. NUT (96906)	
5-9-	962705	. WIRE LIST	
-4	331952-0	. . CONTACT, Electrical (00779) (350894-1)	
-5	1-332056-0	. . FERRULE, Coaxicon connector (00779) (350893)	
-6	66102-1	. . CONTACT, Electrical (00779) (350399-1)	
5-9-	117547-5	. RECEPTACLE AND PLUG ASSY, Electrical connector	
-7	202287-1	. . SHELL, Electrical connector (00779) (350375)	
-8	202650-2	. . BLOCK, Pin (00779) (681007)	
-9	1-202301-0	. HOOD, Connector, clamping (00779) (310176-2)	
-10	DPX2AD-C7BS 67S-33B-0206	. CONNECTOR, Plug (71468) (350878-1)	
-11	MS51959-14	. SCREW (96906)	
-12	S138-16-2	. HOOD, Connector, clamping (07418) (310031-1)	
-13	651023-5	. MARKER	
-14	651023-2	. MARKER	
-15	651023-3	. MARKER	
-16	651023-1	. MARKER	
-17	651023-4	. MARKER	
-18	AN3420-18A	. BUSHING, Cable (88044)	
-19	AN3420-16A	. BUSHING, Cable (88044)	

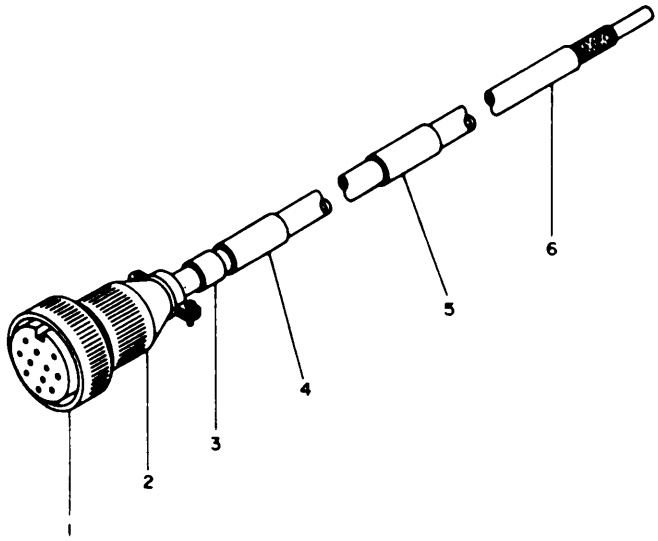

Figure 5-10. Power Electrical Cable Assembly, CX-10926/APM-239A

FIG. & INDEX NO.	PART NO.	PART NAME (NOMENCLATURE OR DESCRIPTION) 1 2 3 4 5 6 7	USABLE ON CODE
5-10-	119058-1	CABLE ASSY, Power, Electrical, CX-10926/APM-239A (See figure 5-1-7 for NHA)	
-1	MS3106A14S-1S	. CONNECTOR, Plug, electrical (96906)	
-2	MS3C57-6A	. CLAMP, Cable (96906)	
-3	651023-8	. MARKER	
-4	651023-7	. MARKER	
-5	651023-6	. MARKER	
-6	THOF-3	. CABLE, Power, electrical (81349)	

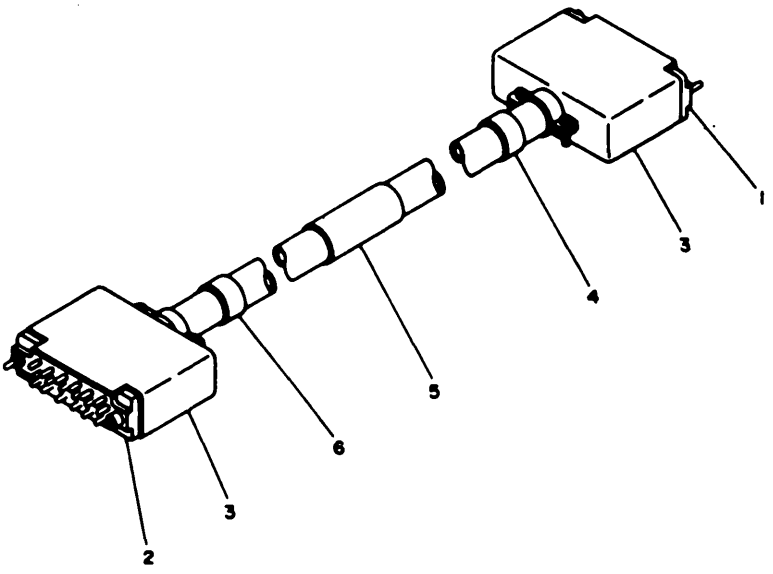

Figure 5-11. Electrical Special Purpose Cable Assemblies, CX-10921/APM-239A, CX-10923/APM-239A, CX-10925/APM-239A

FIG. & INDEX NO.	PART NO.	PART NAME (NOMENCLATURE OR DESCRIPTION) 1 2 3 4 5 6 7	USABLE ON CODE
5-11-	119059-1	CABLE ASSY, Special Purpose, Electrical, CX-10921/APM-239A (See figure 5-1-45 for NHA)	A
5-11-	119060-1	CABLE ASSY, Special Purpose, Electrical, CX-10925/APM-239A (See figure 5-1-45 for NHA)	B
5-11-	119069-1	CABLE ASSY, Special Purpose, Electrical, CX-10923/APM-239A (See figure 5-1-45 for NHA)	C
-1	SM42-20S	. CONNECTOR, Plug, electrical (95238) (350105-16)	A
	MRE20S-G7	. CONNECTOR, Plug, electrical (81312) (350067-2)	B
	SM11-20S	. CONNECTOR, Plug, electrical (95238) (350105-06)	C
-2	SM42-20P	. CONNECTOR, Plug, electrical (95238) (350105-15)	A
	MRE20P-G7	. CONNECTOR, Plug, electrical (81312) (350067-1)	B
	SM11-20P	. CONNECTOR, Plug, electrical (95238) (350105-05)	C
-3	SM42-20H	. HOOD, Connector, clamping (95238) (310172-1)	A

FIG. & INDEX NO.	PART NO.	PART NAME (NOMENCLATURE OR DESCRIPTION) 1 2 3 4 5 6 7	USABLE ON CODE
5-11-3	20-20H	. HOOD, Connector, clamping (95238) (310171-1)	B
	SM11-20H	. HOOD, Connector, clamping (95238) (310168-1)	C
-4	651023-10	. MARKER	A,B
	651023-15	. MARKER	C
-5	651023-9	. MARKER	A
	651023-12	. MARKER	B
	651023-22	. MARKER	C
-6	651023-11	. MARKER	A,B
	651023-14	. MARKER	C

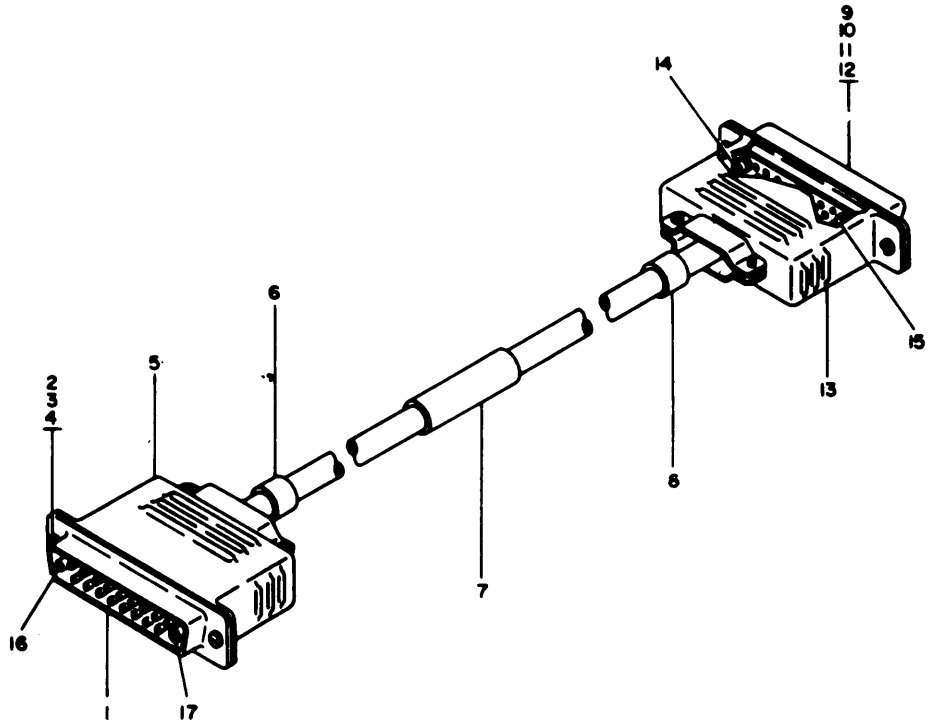

Figure 5-12. Electrical Special Purpose Cable Assemblies, CX-10922/APM-239A, CX-11734/APM-230A, CX-11735/APM-239A

FIG. & INDEX NO.	PART NO.	PART NAME (NOMENCLATURE OR DESCRIPTION) 1 2 3 4 5 6 7	USABLE ON CODE
5-12-	119163-1	CABLE ASSY, Special Purpose, Electrical, CX-11734/ APM-239A (See figure 5-1-45 for NHA)	A
5-12-	119163-2	CABLE ASSY, Special Purpose, Electrical, CX-11735/ APM-239A (See figure 5-1-45 for NHA)	B
5-12-	119061-1	CABLE ASSY, Special Purpose, Electrical, CX-10922/ APM-239A (See figure 5-1-45 for NHA)	C
-1	350127-16	. CONNECTOR, Plug, electrical	A
	DBM-17W2S	. CONNECTOR, Plug, electrical (71468) (350127-13)	B
	DBM-17W2P	. CONNECTOR, Plug, electrical (71468) (350127-03)	C

FIG. & INDEX NO.	PART NO.	PART NAME (NOMENCLATURE OR DESCRIPTION) 1 2 3 4 5 6 7	USABLE ON CODE
5-12-2	MS51597-3	. SCREW (96906)	A
	MS51597-13	. SCREW (96906)	B, C
-3	MS35338-134	WASHER, Lock (96906)	A
	MS35338-135	. WASHER, Lock (96906)	B, C
-4	NAS671C2	. NUT (80205)	A
	MS16210-2	. NUT (96906)	B, C
-5	310173-2	. HOOD, Connector, clamping	A
	DB-24659	. HOOD, Connector, clamping (71468) (310173-1)	B, C
-6	651023-8	. MARKER	
-7	651023-46	. MARKER	A
	651023-47	. MARKER	B
	651023-13	. MARKER	C
-8	651023-26	. MARKER	
-9	DBM-17W2P	. CONNECTOR, Plug, electrical (71468) (350127-03)	A
	350127-17	. CONNECTOR, Plug, electrical	B
	DBM-17W2S	. CONNECTOR, Plug, electrical (71468) (350127-13)	C
-10	MS51957-13	. SCREW (96906)	A, C
	MS51957-3	. SCREW (96906)	B
-11	MS35338-135	. WASHER, Lock (96906)	A, C
	MS35338-134	. WASHER, Lock (96906)	B
-12	MS16210-2	. NUT (96906)	A, C
	NAS671C2	. NUT (80205)	B
-13	DB-24659	. HOOD, Connector, clamping (71468) (310173-1)	A, C
	310173-2	. HOOD, Connector, clamping	B
5-12-	962729	. WIRE LIST	A
	962730	. WIRE LIST	B
	962700	. WIRE LIST	C
-14	DM51155	. . CONTACT, Receptacle (71468) (350127-14)	A
	DM53742-5001	. . CONTACT, Coaxial, receptacle (71468) (350127-06)	C
-15	DM53742-5001	. . CONTACT, Coaxial, receptacle (71468) (350127-06)	
-16	DM51157	. . CONTACT, Plug (71468) (350127-15)	A
	DM53740-5001	. . CONTACT, Coaxial, plug (71468) (350127-08)	C
-17	DM53740-5001	. . CONTACT, Coaxial, plug (71468) (350127-08)	

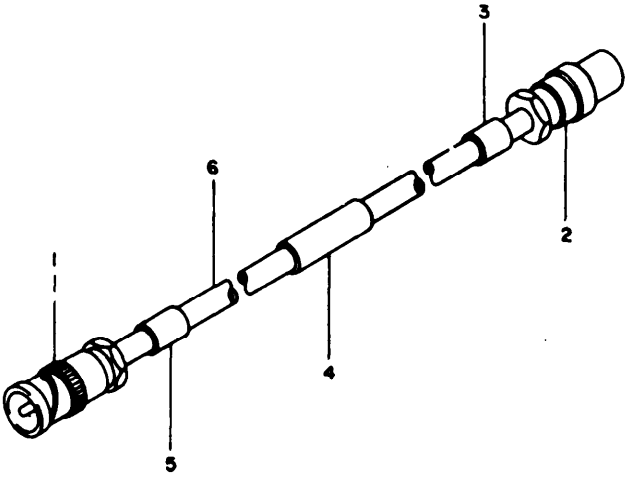

Figure 5-13. Radio Frequency Cable Assembly, CG-3491/APM-239A

FIG. & INDEX NO.	PART NO.	PART NAME (NOMENCLATURE OR DESCRIPTION) 1 2 3 4 5 6 7	USABLE ON CODE
5-13-	119068-1	CABLE ASSY, Radio Frequency, CG-3491/APM-239A (See figure 5-1-45 for NHA)	
-1	UG-88F/U	. CONNECTOR, Plug, electrical (81349)	
-2	350881	. CONNECTOR, Plug, electrical	
-3	651023-21	. MARKER	
-4	651023-19	. MARKER	
-5	651023-20	. MARKER	
-6	RG-58C/U	. CABLE, Radio frequency (81349)	

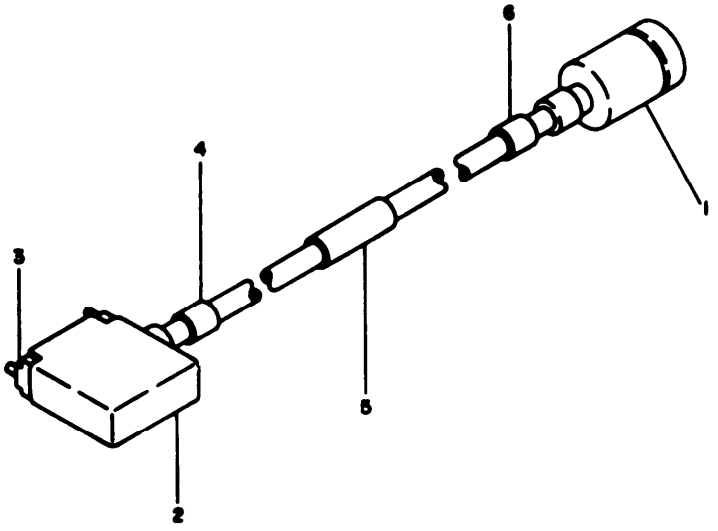

Figure 5-14. Electrical Special Purpose Cable Assembly, CX-10924/APM-239A

FIG. & INDEX NO.	PART NO.	PART NAME (NOMENCLATURE OR DESCRIPTION) 1 2 3 4 5 6 7	USABLE ON CODE
5-14-	119062-1	CABLE ASSY, Special Purpose, Electrical, CX-10924/APM-239A (See figure 5-1-45 for NHA)	
-1	MS3116F14-15S	. CONNECTOR, Plug, electrical (96906)	
-2	SM14-20H-1	. HOOD, Connector, clamping (95238) (310169-1)	
-3	SM14-20P	. CONNECTOR, Plug, electrical (95238) (350105-07)	
-4	651023-18	. MARKER	
-5	651023-16	. MARKER	
-6	651023-17	. MARKER	

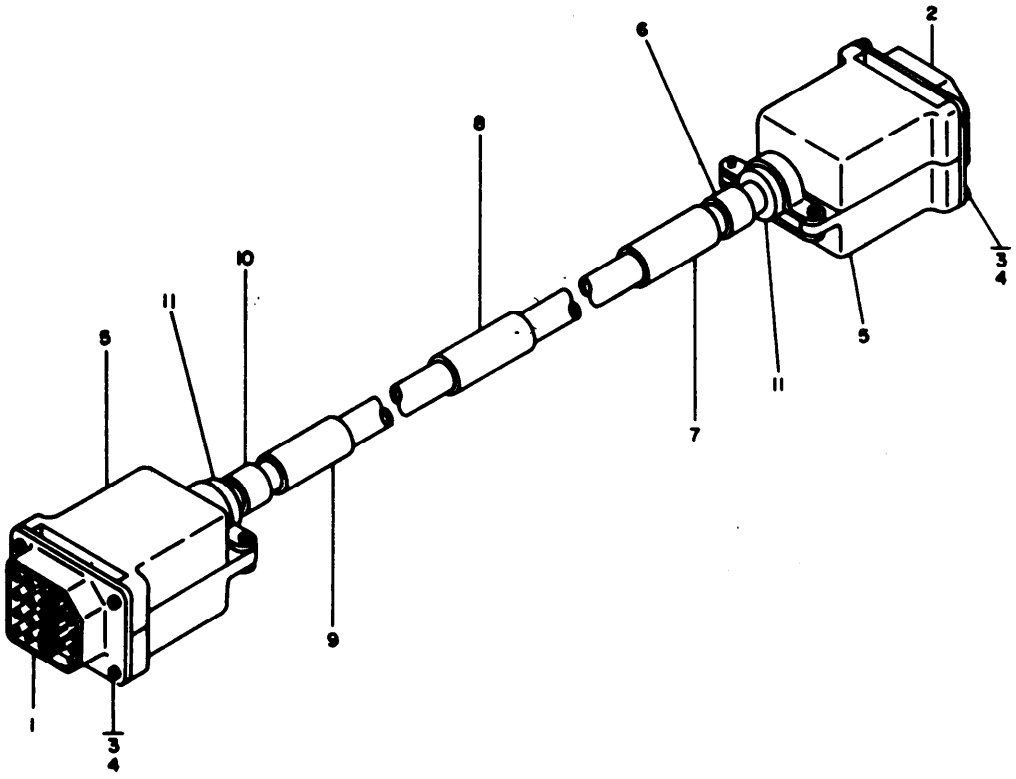

Figure 5-15. Electrical Special Purpose Cable Assembly, CX-10908/APM-239A

FIG. & INDEX NO.	PART NO.	PART NAME (NOMENCLATURE OR DESCRIPTION) 1 2 3 4 5 6 7	USABLE ON CODE
5-15-	119076-1	CABLE ASSY, Special Purpose, Electrical, CX-10908/ APM-239A (See figure 5-1-45 for NHA)	
-1	94-62548-1	. CONNECTOR, Plug, electrical (02660) (350886-1)	
-2	94-52548-1	. CONNECTOR, Plug, electrical (02660) (350885-1)	
-3	MS51957-16	. SCREW (96906)	
-4	MS35338-135	. WASHER, Lock (96906)	
-5	S283-2-1	. HOOD, Connector, clamping (07418) (310032-1)	
-6	651023-11	. MARKER	
-7	651023-24	. MARKER	
-8	651023-25	. MARKER	
-9	651023-34	. MARKER	
-10	651023-10	. MARKER	
-11	AN3420-12A	. BUSHING, Cable (88044)	

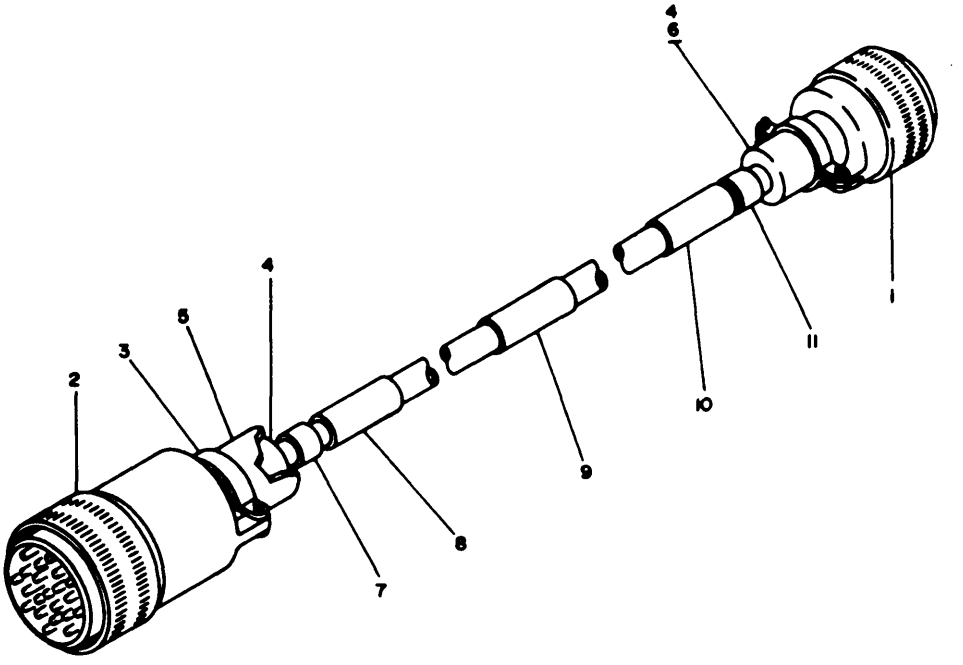

Figure 5-16. Electrical Special Purpose Cable Assemblies, CX-10909/APM-239A, CX-10911/APM-239A, CX-10912/APM-239A

FIG. & INDEX NO.	PART NO.	PART NAME (NOMENCLATURE OR DESCRIPTION) 1 2 3 4 5 6 7	USABLE ON CODE
5-16-	119077-1	CABLE ASSY, Special Purpose, Electrical, CX-10909/ APM-239A (See figure 5-1-45 for NHA)	A
5-16-	119080-1	CABLE ASSY, Special Purpose, Electrical, CX-10911/ APM-239A (See figure 5-1-45 for NHA)	B
5-16-	119081-1	CABLE ASSY, Special Purpose, Electrical, CX-10912/ APM-239A (See figure 5-1-45 for NHA)	C
-1	MS24266R12B12S	. CONNECTOR, Plug, electrical (96906)	A
	482152-1	. CONNECTOR, Modified	B
	482152-2	. CONNECTOR, Modified	C
-2	MS3106A20-27P	. CONNECTOR, Plug, electrical (96906)	A
	MS3106A28-21P	. CONNECTOR, Plug, electrical (96906)	B, C
-3	MS3057-12A	. CLAMP, Cable (96906)	A
	MS3057-16A	. CLAMP, Cable (96906)	B, C
-4	AN3420-8A	. BUSHING, Cable (88044)	
-5	AN3420-12A	. BUSHING, Cable (88044)	
-6	AN3420-12A	. BUSHING, Cable (88044)	C
-7	651023-30	. MARKER	
-8	651023-27	. MARKER	A
	651023-37	. MARKER	B, C
-9	651023-29	. MARKER	A
	651023-39	. MARKER	B
	651023-41	. MARKER	C

FIG. & INDEX NO.	PART NO.	PART NAME (NOMENCLATURE OR DESCRIPTION) 1 2 3 4 5 6 7	USABLE ON CODE
5-16-10	651023-28	. MARKER	A
	651023-38	. MARKER	B
	651023-40	. MARKER	C
-11	651023-31	. MARKER	

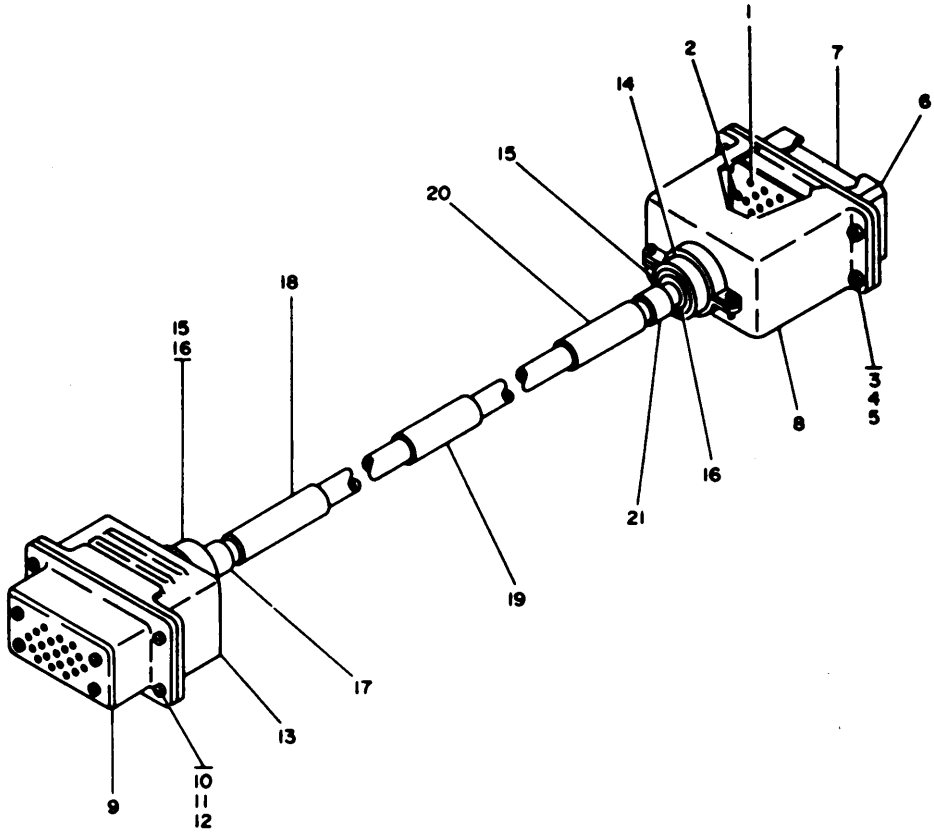

Figure 5-17. Electrical Special Purpose Cable Assembly, CX-10907/APM-239A

FIG. & INDEX NO.	PART NO.	PART NAME (NOMENCLATURE OR DESCRIPTION) 1 2 3 4 5 6 7	USABLE ON CODE
5-17-	119078-1	CABLE ASSY, Special Purpose, Electrical, CX-10907/ APM-239A (See figure 5-1-45 for NHA)	
-1	66102-1	. CONTACT, Electrical (00779) (350399-1)	
-2	66098-1	. CONTACT, Electrical (00779) (350399-7)	
-3	MS51957-16	. SCREW (96906)	
-4	MS35338-135	. WASHER, Lock (96906)	
-5	MS16210-2	. NUT (96906)	
5-17-	117547-5	. RECEPTACLE AND PLUG ASSY, Electrical connector	
-6	202287-1	. . SHELL, Electrical connector (00779) (350375)	
-7	202650-2	. . BLOCK, Pin (00779) (681007)	
-8	1-202301-0	. HOOD, Connector, clamping (00779) (310176-2)	
-9	DPD-45-33S-1L	. CONNECTOR, Plug, electrical (71468) (350880-1)	
-10	MS51959-31	. SCREW (96906)	
-11	MS35338-136	. WASHER, Lock (96906)	

FIG. & INDEX NO.	PART NO.	PART NAME (NOMENCLATURE OR DESCRIPTION) 1 2 3 4 5 6 7	USABLE ON CODE
5-17-12	MS16210-3	. NUT (96906)	
-13	DPD-33-11612	. SHELL, Junction (71468) (310170-1)	
-14	AN3420-18A	. BUSHING, Cable (88044)	
-15	AN3420-16A	. BUSHING, Cable (88044)	
-16	AN3420-12A	. BUSHING, Cable (88044)	
-17	651023-26	. MARKER	
-18	651023-32	. MARKER	
-19	651023-33	. MARKER	
-20	651023-6	. MARKER	
-21	651023-8	. MARKER	

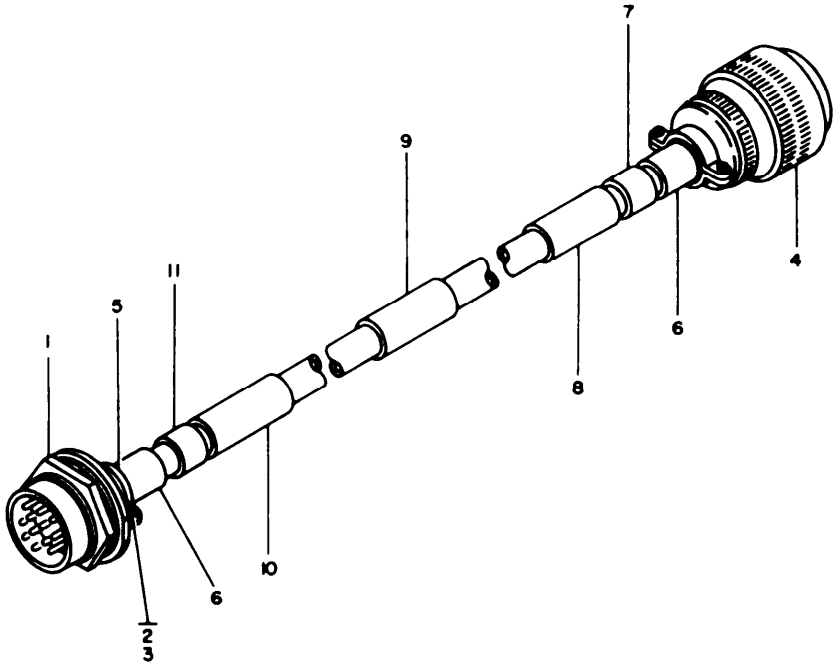

Figure 5-18. Electrical Special Purpose Cable Assembly, CX-10910/APM-239A

FIG. & INDEX NO.	PART NO.	PART NAME (NOMENCLATURE OR DESCRIPTION) 1 2 3 4 5 6 7	USABLE ON CODE
5-18-	119079-1	CABLE ASSY, Special Purpose, Electrical, CX-10910/ APM-239A (See figure 5-1-45 for NHA)	
-1	MS24265R22B55P	. CONNECTOR, Receptacle, electrical (96906)	
-2	MS51957-17	. SCREW (96906)	
-3	MS35338-135	. WASHER, Lock (96906)	
-4	MS3116F-18-32S	. CONNECTOR, Plug, electrical (96906)	
-5	AN3420-18A	. BUSHING, Cable (88044)	
-6	AN3420-16A	. BUSHING, Cable (88044)	
-7	651023-26	. MARKER	
-8	651023-35	. MARKER	
-9	651023-36	. MARKER	
-10	651023-6	. MARKER	
-11	651023-8	. MARKER	

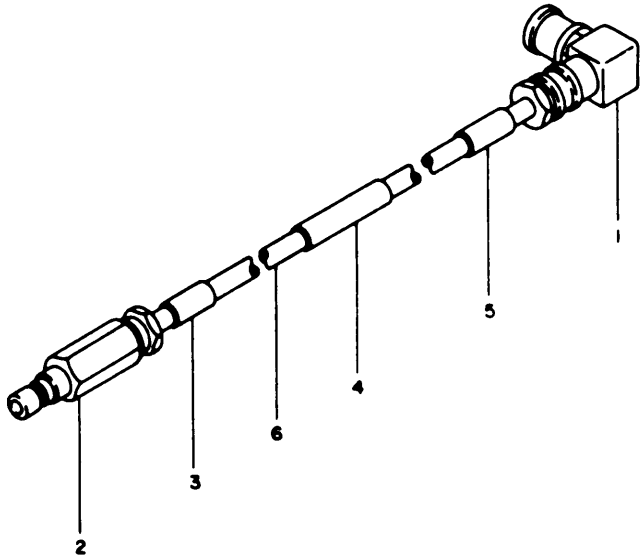

Figure 5-19. Electrical Special Purpose Cable Assembly, CG-3470/APM-239A

FIG. & INDEX NO.	PART NO.	PART NAME (NOMENCLATURE OR DESCRIPTION) 1 2 3 4 5 6 7	USABLE ON CODE
5-19-	119162-1	CABLE ASSY, Special Purpose, Electrical, CG-3470/ APM-239A (See figure 5-1-45 for NHA)	
-1	51-011-0000	. CONNECTOR, Subminiature plug (98291) (350977-1)	
-2	51-008-0000	. CONNECTOR, Subminiature jack (98291) (350976-1)	
-3	651023-45	. MARKER	
-4	651023-43	. MARKER	
-5	651023-44	. MARKER	
-6	RG-188A/U	. CABLE, Radio frequency (81349)	

NUMERICAL INDEX

PART NUMBER	SOURCE CODE		REPAIR CODE	RECOVER CODE
	AIR FORCE	NAVY	AIR FORCE	NAVY
AN256F8	P1	P1	NS	C
AN3420-12A	P1	P1	NS	C
AN3420-16A	P1	P1	NS	C
AN3420-18A				
AN3420-8A	P1	P1	NS	C
CE71C701H	P1	P1	NS	C
CLS632-2	P1	P1	NS	C
CS13BC475K	P1	P1	NS	C
CS13BF336K	P1	P1	NS	C
CS13BG226K	P1	P1	NS	C

PART NUMBER	SOURCE CODE		REPAIR CODE	RECOVER CODE
	AIR FORCE	NAVY	AIR FORCE	NAVY
CZ24BKF103	P1	P1	NS	C
C3M	P1	P1	NS	C
C6280APX	P1	P1	NS	L
DBMF17W2S	P1	P1	NS	C
DBM17W2P	P1	P1	NS	C
DB24659	P1	P1	NS	C
DM51155	P1	P1	NS	C
DM51157	P1	P1	NS	C
DM53740-5001	P1	P1	NS	C
DM53742-5001	P1	P1	NS	C

PART NUMBER	SOURCE CODE		REPAIR CODE	RECOVER CODE
	AIR FORCE	NAVY	AIR FORCE	NAVY
DPD33-11612				
DPD45-33S1L				
DPJ59C10-33SB	P1	P1	NS	C
DPX2ADC7BS67	P1		NS	
S33B0206				
FHN20G	P1	P1	NS	C
F02A250V1-2A	P1	P1	NS	C
F02A250V2A	P1	P1	NS	C
F03A250V10A	P1	P1	NS	C
HP3N	P1	P1	NS	C
HP4N	P1	P1	NS	C
HP6N	P1	P1	NS	C
HP8N	P1	P1	NS	C
HP9N	P1	P1	NS	C
JAN1N1202	P1	P1	NS	C
JAN1N3611	P1	P1	NS	C
JAN1N486B	P1	P1	NS	C
JAN1N754A	P1	P1	NS	C
JAN1N914	P1	P1	NS	C
JAN2N2219A	P1	P1	NS	C
LH74LC13RN	P1	P1	NS	C
LH74LC13WT	P1	P1	NS	C
MRE20PG7	P1	P1	NS	C
MRE20SG7	P1	P1	NS	C
MS15795-803	P1	P1	NS	C
MS15795-805	P1	P1	NS	C
MS15795-807	P1	P1	NS	C
MS15795-808	P1	P1	NS	C
MS16210-2	P1	P1	NS	C
MS16210-3	P1	P1	NS	C
MS16210-4	P1	P1	NS	C
MS20426AD3-4	P1	P1	NS	C
MS24265R22B55P				
MS24266R12B12S	P1	P1	NS	C
MS24266R22B55S	P1	P1	NS	C
MS25036-1	P1	P1	NS	C
MS25036-3	P1	P1	NS	C
MS25036-50	P1	P1	NS	C
MS25036-6	P1	P1	NS	C
MS25036-8	P1	P1	NS	C
MS25068-23	P1	P1	NS	C
MS25125D1	P1	P1	NS	C
MS25127C3	P1	P1	NS	C
MS25252NE2D	P1	P1	NS	C
MS25256-2-327	P1	P1	NS	C
MS28136-4	P1	P1	NS	C
MS3057-12A	P1	P1	NS	C
MS3057-16A	P1	P1	NS	C
MS3057-6A	P1	P1	NS	C
MS3102A14S1P	P1	P1	NS	C
MS3102A20-27S	P1	P1	NS	C
MS3102A28-21S	P1	PC	NS	1
MS3106A14S-1S	P1	P1	NS	C
MS3106A20-27P	P1	P1	NS	C
MS3106A28-21P	P1	P1	NS	C

PART NUMBER	SOURCE CODE		REPAIR CODE	RECOVER CODE
	AIR FORCE	NAVY	AIR FORCE	NAVY
MS3112E14-15P	P1	P1	NS	C
MS3116F14-15S	P1	P1	NS	C
MS3116F18-32S				
MS35058-21	P1	P1	NS	C
MS35058-23	P1	P1	NS	C
MS35059-21	P1	P1	NS	C
MS35338-134				
MS35338-135	P1	P1	NS	C
MS35338-136	P1	P1	NS	C
MS35338-137	P1	P1	NS	C
MS35338-138	P1	P1	NS	C
MS35431-8	P1	P1	NS	C
MS35489-135	P1	P1	NS	C
MS51957-13	P1	P1	NS	C
MS51957-14	P1	P1	NS	C
MS51957-15	P1	P1	NS	C
MS51957-16	P1	P1	NS	C
MS51957-17				
MS51957-26	P1	P1	NS	C
MS51957-27	P1	P1	NS	C
MS51957-29	P1	P1	NS	C
MS51957-3				
MS51957-30	P1	P1	NS	C
MS51957-31	P1	P1	NS	C
MS51957-32				
MS51957-45	P1	P1	NS	C
MS51957-47	P1	P1	NS	C
MS51958-60				
MS51958-63				
MS51958-64	P1	P1	NS	C
MS51959-14	P1		NS	
MS51959-16	P1	P1	NS	C
MS51959-31				
MS51959-44	P1	P1	NS	C
MS51960-65	P1	P1	NS	C
MS91528-2K4B	P1	P1	NS	C
NAS671C10	P1	P1	NS	C
NAS671C2				
N5	P1	P1	NS	C
PAM33MG6-6-250VAC400CPS	P1	P1	NS	C
RC20GF114J	P1	P1	NS	C
RC20GF152J	P1	P1	NS	C
RC20GF221J	P1	P1	NS	C
RC20GF302J	P1	P1	NS	C
RC20GF471J	P1	P1	NS	C
RC20GF910J	P1	P1	NS	C
RC32GF202J	P1	P1	NS	C
RG187AU	P1		NS	C
RG188AU	P1	P1	NS	C
RG58CU	P1	P1	NS	C
RN70C1722D	P1	P1	NS	C
RW67G101	P1	P1	NS	C
RW68V270	P1	P1	NS	C

PART NUMBER	SOURCE CODE		REPAIR CODE	RECOVER CODE
	AIR FORCE	NAVY	AIR FORCE	NAVY
SE099E02	P1	P1	NS	C
SM11-20H	P1	P1	NS	C
SM11-20P	P1	P1	NS	C
SM11-20S	P1	P1	NS	C
SM14-20H1	P1	P1	NS	C
SM14-20P	P1	P1	NS	C
SM20-20H	P1	P1	NS	C
SM42-20H	P1	P1	NS	C
SM42-20P	P1	P1	NS	C
SM42-20S	P1	P1	NS	C
ST752895-112	M	MO	F	
S138-16-2	P1		NS	
S283-2-1	P1	P1	NS	C
S428-1	P1	P1	NS	C
THOF3	P1	P1	NS	C
UG1094BU	P1	P1	NS	C
UG201U	P1	P1	NS	C
UG309U	P1		NS	
UG636AU	P1		NS	
UG643U	P1	P1	NS	C
UG88FU	P1	P1	NS	C
ZSP6-602				
025-0500-000	P1	P1	NS	C
031-0900-001	P1	P1	NS	C
033-0092-0001	P1		NS	
1-202301-0	P1	P1	NS	C
1-331950-0	P1	P1	NS	C
1-332056-0	P1	P1	NS	C
JAN1N2982B	P1	P1	NS	C
101056-04	P1	P1	NS	C
101056-06	P1	P1	NS	C
113612-1	P1	P1	NS	C
117547-5	X1	X1	F	
117547-6	A	A	F	F
119050-1	X2	X2	F	
119050P1	X1	X1	F	
119050P2	X1	X1	F	
119052-1	A	A	F	F
119057-1	X2	X2	D	
119057P1	X1	X1	D	
119058-1	A		F	
119059-1	A	A	F	F
119060-1	A	A	F	F
119061-1	A	A	F	F
119062-1	A	A	F	F
119064-1	P1	P1	PF	L
119064-2	X1	X1		F
119065-1	A		D	
119065-2				
119065-3		P1		E
119066-1	A	A	D	F
119067-1	A	A	D	F
119068-1	A	A	F	F
119069-1	A	A	F	F

PART NUMBER	SOURCE CODE		REPAIR CODE	RECOVER CODE
	AIR FORCE	NAVY	AIR FORCE	NAVY
119073-1	P1	P1	PF	L
119074-1	A		F	
119076-1	A	A	F	F
119077-1	A	A	F	F
119078-1				
119079-1				
119080-1	A	A	F	F
119081-1	A	A	F	F
119095-1	X2	X2	F	
119106-1	A	A	F	F
119106P1	M	M	F	F
119141-1	X2	X2	F	
119142-1	A	A	F	F
119143-1	P1	P1	NS	C
119143-2	P1	P1	NS	C
119143-3	P1	P1	NS	C
119143-4	P1	P1	NS	C
119143-5	P1	P1	NS	C
119143-6	P1	P1	NS	C
119143-7	P1	P1	NS	C
119143-8	P1	P1	NS	C
119145-1	M	M	F	F
119155-1	X2	X2	F	
119162-1	A	A	F	F
119163-1	A	A	F	F
119163-2	A	A	F	F
119165-1	P1	P1	NS	C
119165-2	P1	P1	NS	C
119165-3	P1	P1	NS	C
119165-4	P1	P1	NS	C
119198-1	P1		NS	
119198-2	P1	P1	NS	C
119598-1				
1212-2	P1	P1	NS	C
1292-2	P1	P1	NS	C
147-4-032 BRASSHT	X2	X2	F	
147-6-032 BRASSHT	X2	X2	F	
191P22492T16	P1	P1	NS	C
2H50A14-3D06	P1	P1	NS	L
20196-8				
202287-1	P1	P1	NS	C
202650-2	P1	P1	NS	C
202651-2	P1	P1	NS	C
202795-1	P1	P1	NS	C
2034-2-05	X2	X2	F	
249-1173-001	P1	P1	NS	C
2829-75-1	P1	P1	NS	C
310173-2				
331952-0	P1	P1	NS	C
332F4	X2	X2	F	
340297-3	X2	X2	F	
341082	X2	X2	F	

PART NUMBER	SOURCE CODE		REPAIR CODE	RECOVER CODE
	AIR FORCE	NAVY	AIR FORCE	NAVY
350127-16				
350127-17				
350406-12R	X1	X1	S	
350406-13C	X1	X1	F	
350406-13E	X1	X1	F	
350406-13H	X1	X1	F	
350406-13K	X1	X1	F	
350406-13M	X1	X1	F	
350406-13P	X1	X1	F	
350406-13S	X1	X1	F	
350406-13U	X1	X1	F	
350406-13V	X1	X1	F	
350406-13W	X1	X1	F	
350406-13Y	X1	X1	F	
350881	P1	M	NS	F
350978-1	X1	X1	F	
350978-2	X1	X1	F	
360087				
360087-1	X2	X2	F	
360087-2	X2		F	
360088	X2	X2	F	
410125	X2	X2	F	
41842	P1	P1	NS	C
482152-1	M	MO	F	
482152-2	M	MO	F	
51-008-0000	P1	P1	NS	C
51-011-0000	P1	P1	NS	C
51609-1				
564F4	X2	X2	F	
610071	P1	P1	NS	C
610072	P1	P1	NS	C
610073	P1	X2	NS	
6108SS0832-7	P1	P1	NS	C
6312CSS0832	P1	P1	NS	C
651013	M	MO	F	
651014-1	M	MO	F	
651014-2	M	MO	F	
651014-3	M	MO	F	
651018	M	MO	F	
651023-1	M		F	
651023-10	M	MO	F	
651023-11	M	MO	F	
651023-12	M	MO	F	
651023-13	M	MO	F	
651023-14	M	MO	F	
651023-15	M	MO	F	
651023-16	M	MO	F	
651023-17	M	MO	F	
651023-18	M	MO	F	
651023-19	M	MO	F	
651023-2	M		F	
651023-20	M	MO	F	
651023-21	M	MO	F	

PART NUMBER	SOURCE CODE		REPAIR CODE	RECOVER CODE
	AIR FORCE	NAVY	AIR FORCE	NAVY
651023-22	M	MO	F	
651023-23	M	MO	F	
651023-24	M	MO	F	
651023-25	M	MO	F	
651023-26	M	MO	F	
651023-27	M	MO	F	
651023-28	M	MO	F	
651023-29	M	MO	F	
651023-3	M		F	
651023-30	M	MO	F	
651023-31	M	MO	F	
651023-32				
651023-33				
651023-34				
651023-35				
651023-36				
651023-37	M	MO	F	
651023-38	M	MO	F	
651023-39	M	MO	F	
651023-4	M	MO	F	
651023-40	M	MO	F	
651023-41	M	MO	F	
651023-42	M	MO	F	
651023-43	M	MO	F	
651023-44	M	MO	F	
651023-45	M	MO	F	
651023-46	M	MO	F	
651023-47	M	MO	F	
651023-5	M	MO	F	
651023-6	M	MO	F	
651023-7	M	MO	F	
651023-8	M	MO	F	
651023-9	M	MO	F	
66098-1				
66100-1	P1	P1	NS	C
66102-1	P1	P1	NS	C
66104-1	P1	P1	NS	C
690273	P1	P1	NS	C
751064-07	X2	X2	F	
751495	X1	X1	F	
8TB8	P1	P1	NS	C
841104	P1	P1	NS	C
850186-1	X2	X2	F	
863601-1	X1	X1	S	
865778	X1	X1	F	
865779-2	X1	X1	F	
865779-3	X1	X1	F	
865779-4	X1	X1	F	
865779-5	X1	X1	F	
865779-6	X1	X1	F	
865779-7	X1	X1	F	
865779-8	X1	X1	F	
865780-1	X1	X1	F	

PART NUMBER	SOURCE CODE		REPAIR CODE	RECOVER CODE
	AIR FORCE	NAVY	AIR FORCE	NAVY
865780-2	X1	X1	F	
865780-3	X1	X1	F	
865780-4	X1	X1	F	
865958-1	X1	X1	F	
865958-2	X1	X1	F	
865972	P1	X1	NS	
880007	P1	P1	NS	C
880177	P1	P1	NS	C
890358-1	P1	P1	NS	C
890359-1	P1	P1	NS	C
890360	P1	P1	NS	C

PART NUMBER	SOURCE CODE		REPAIR CODE	RECOVER CODE
	AIR FORCE	NAVY	AIR FORCE	NAVY
930120-2	P1	P1	NS	C
930129-8	M	M	F	F
94-52548-1	P1	P1	NS	C
94-62548-1	P1	P1	NS	C
962700	U	U		
962704	U	U		
962705	U	U		
962713-1	U	U		
962723-1	U	U		
962729	U	U		
962730	U	U		

SECTION VI

DEPOT OVERHAUL STANDARDS

6-1. INTRODUCTION

6-2. Transponder Test Set AN/APM-239A must be tested thoroughly after rebuild or repair to insure that it meets adequate performance standards for return to stock and re-issue. Use the tests described in this section to measure the performance of the repaired test set. It is mandatory that repaired equipment to be re-issued, or returned to stock for re-issue, meet all of the performance standards given in this section.

6-3. APPLICABLE REFERENCES.

6-4. REPAIR STANDARDS. Applicable procedures of the Signal Corps depot performing this test and its general standards for repaired signal equipment form a part of the requirements for testing this test set.

6-5. TECHNICAL PUBLICATIONS. No technical publications are required other than this manual.

6-6. MODIFICATION WORK ORDERS. Perform all modification work orders applicable to this equipment before making the tests specified. DA Pam 310-7 lists all available MWO's.

6-7. TEST FACILITIES REQUIRED.

6-8. The following items are required for depot testing:

ITEM	COMMON NAME
Multimeter AN/USM-223	Multimeter
Oscilloscope AN/USM-140B	Oscilloscope.
Simulator Test Set AN/APM-245	Simulator Test Set

6-9. GENERAL TEST REQUIREMENTS.

6-10. A source of 115-volts a-c, 60-Hz, single phase and a source of 115-volts a-c, 400-Hz, single phase; the test equipment listed in paragraph 6-8; and a locally fabricated test fixture are required to test a repaired Test Set, Transponder Set AN/APM-239A. The test fixture, shown schematically in figure 6-1, is used to provide loads to the power supply portion of the test set.

6-11. Testing will be simplified if connections and panel-control settings are made initially and modifications are made as required for the individual tests. Initially, set the controls to the positions indicated in figure 6-2. The tests are to be performed in the exact sequence presented. When starting a new test, leave all controls in their last used positions of the previous test. Do not set controls to their initial positions unless specifically directed to do so.

6-12. Remove jumper plug P5 from MODE C ENCODER connector J5 for all tests. Replace the jumper plug at the conclusion of the tests.

6-13. TESTS.

6-14. MODE C SIMULATOR RESISTANCES TEST.

a. Set the multimeter for use as an ohmmeter to measure approximately 110-kilohms, and connect the multimeter common probe to MODE C ENCODER connector J5, terminal R (ground).

b. In turn, connect the multimeter test probe to MODE C ENCODER connector J5, terminals s, g, b, L, f, J, P, T, F, m, and p. A reading between 99-kilohms and 121-kilohms is required at each terminal.

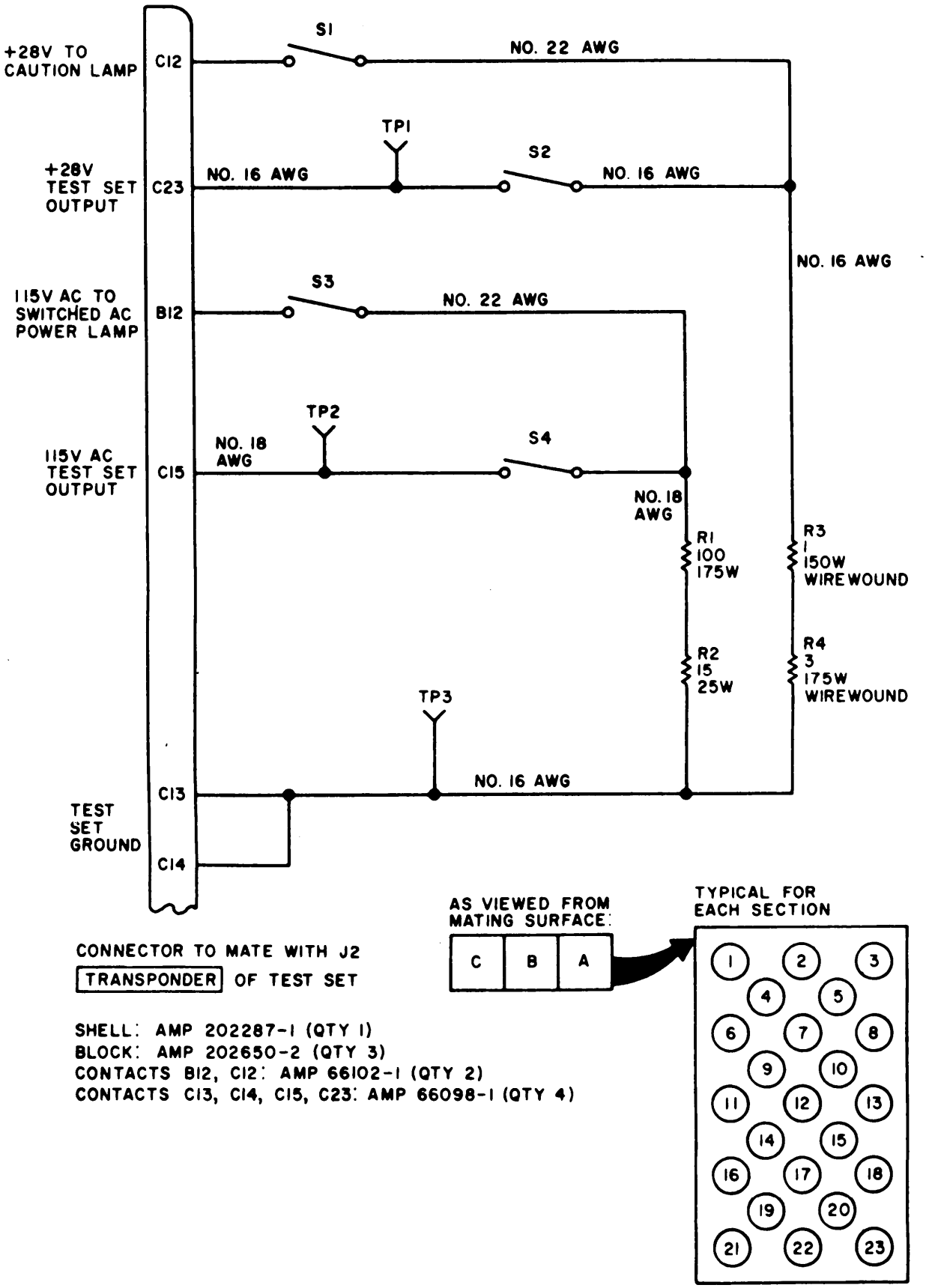

Figure 6-1. Test Fixture

CONTROL	POSITION
6 AMP POWER circuit breaker	OFF
AC CONTROL knob	Fully counterclockwise
DC CONTROL knob	Fully counterclockwise
METER SELECT switch	AC
POWER MODE switch	AC/DC
ALTITUDE DIGITIZER switch	IN
X PULSE switch	OFF
PANEL LIGHTS switch	OFF
TEST CONDITION switch	OHMS
LDG GR switch	UP
ZEROIZE switch	OFF
MODE 4 REPLY switch	REPLY
MODE 4 DISPARITY switch	DISPARITY
All MODE C ENCODER SIMULATOR switches (C1, A1, C2, A2, C4, A4, B1, B2, D2, B4, and D4 IDENT)	OFF

Figure 6-2. Initial Control Settings

c. Set all the MODE C ENCODER SIMULATOR switches (C1, A1, C2, A2, C4, A4, B1, B2, D2, B4, and D4 IDENT) to ON.

d. In turn, connect the multimeter test probe to MODE C ENCODER connector J5, terminals s, g, b, L, f, J, P, T, F, m, and p. A reading between 2700 ohms and 3300 ohms is required at each terminal to ground.

e. Disconnect the multimeter from the test set.

6-15. A-C POWER SUPPLY TESTS.

a. Connect the test fixture connector to TRANSPONDER connector J2.

b. Connect power cable W3 between POWER INPUT connector J1 and a source of 115 volts, 400 Hz, single phase.

c. Set switches S1, S2, and S3 of the test fixture open. Set switch S4 of the test fixture closed.

d. Set the multimeter to measure a-c voltage of approximately 115 volts. Connect the common probe of the multimeter to test fixture test point TP3, and connect the test probe of the multimeter to test point TP2.

e. Set the 6 AMP POWER circuit breaker to ON and check that the POWER ON indicator illuminates.

f. Adjust the AC CONTROL knob to obtain an indication of 115 volts on the test set voltmeter. The multimeter must indicate between 109 volts and 121 volts.

g. Disconnect the multimeter.

h. Rotate the AC CONTROL knob from fully counterclockwise to fully clockwise. The test set voltmeter must indicate 0-volts at the fully counterclockwise position, and must increase to a minimum value of 125 volts as the knob is rotated clockwise to its fully clockwise position.

i. Reset the AC CONTROL knob for an indication of 115 volts on the test set voltmeter. The test set ammeter must indicate between 0.92 amp and 1.08 amps.

j. Close switch S3 on the test fixture. The SWITCHED AC POWER indicator must illuminate.

k. Open switch S3 on the test fixture. The SWITCHED AC POWER indicator must be extinguished.

6-16. D-C POWER SUPPLY TESTS.

a. Set the METER SELECT switch to DC.

b. Set the POWER MODE switch to DC ONLY.

c. Set the multimeter to measure d-c voltage of approximately 35 volts. Connect the test probe of the multimeter to test fixture test point TP1, and connect the common probe of the multimeter to test point TP3.

d. Rotate the DC CONTROL fully clockwise. The multimeter must indicate 35 volts minimum.

e. Disconnect the multimeter and close switch S2 on the test fixture.

f. Adjust the DC CONTROL to obtain an indication of 28 volts on the test set voltmeter. The test set ammeter must indicate between 6 amperes and 8 amperes.

g. Connect the oscilloscope ground to test fixture test point TP3, and connect the oscilloscope probe to test point TP1. Energize the oscilloscope and set the controls to measure a-c ripple. Maximum permissible ripple is 2 volts peak-to-peak.

h. Disconnect the oscilloscope.

i. Close test fixture switch S1. The CAUTION indicator must illuminate.

j. Open test fixture switch S1. The CAUTION indicator must extinguish.

k. Disconnect the test fixture from the test set.

6-17. PANEL LIGHT VOLTAGE CHECK.

a. Loosen the four captive turnlock fasteners which attach Transponder Set Control C-6280(P)/APX or C-6280A(P)/APX to the front panel of the test set.

b. Carefully pull the transponder set control from the front panel of the test set and disconnect the plug from the rear of the transponder set control.

c. Set the multimeter to measure a-c voltage of approximately 6 volts. Connect the common probe of the multimeter to terminal 53 (ground) of the plug removed from the transponder set control (P1).

d. Connect the test probe of the multimeter to terminal 12 of plug P1.

e. Set the PANEL LIGHTS switch to 6V. The multimeter must read between 5 volts and 7 volts.

f. Set the multimeter to measure a-c voltage of approximately 28 volts.

g. Set the PANEL LIGHTS switch to 28V. The multimeter must read between 25 volts and 31 volts.

h. Set the PANEL LIGHTS switch to OFF, and disconnect the multimeter.

i. Connect plug P1 to the rear of the transponder set control, and replace the transponder set control in the test set. Tighten the four captive turnlock fasteners to secure the transponder set control to the test set front panel.

6-18. MODE C SIMULATOR VOLTAGE OUTPUT TESTS.

a. Set the multimeter to measure d-c voltage of approximately 1.5 volts. Connect the common probe of the multimeter to MODE C ENCODER connector J5, terminal R (ground).

b. Set the TEST CONDITION switch to VOLTS.

c. In turn, connect the multi meter test probe to MODE C ENCODER connector J5, terminals s, g, b, L, f, J, P, T, F, m, and p. The multimeter should indicate between 1 volt and 2 volts at each terminal to ground.

d. Set all MODE C ENCODER SIMULATOR switches (C1, A1, C2, A2, C4, A4, B1, B2, D2, B4, and D4 IDENT) to OFF. Set the multimeter to measure d-c voltage of approximately 20 volts.

e. In turn, connect the multimeter test probe to MODE C ENCODER connector J5, terminals s, g, b, L, f, J, P, T, F, m, and p. The multimeter should indicate between 18.5 volts and 21.5 volts at each terminal to ground.

f. Disconnect the multimeter.

6-19. PULSE LIMITER CIRCUIT CHECK.

a. Connect test set-to-computer cable W11 between MODE 4 COMPUTER connector J4 on the test set and MODE 4 connector J1 on Simulator Test Set AN/APM-245.

b. Connect the oscilloscope preamp input to MODE 4 REPLY connector J4 on Simulator Test Set AN/APM-245. Set the oscilloscope controls to measure pulses of 10 volts amplitude at a prf of 1000 pps.

CAUTION

Do not attempt to inject pulses into MODE 4 REPLY connector J9. This is an output connector.

c. Energize Simulator Test Set AN/APM-245 by placing the power switch to ON. Connect a coaxial jumper cable (BNC connectors) between the INT TRIG connector and M4 TRIG connector of Simulator Test Set AN/APM-245. Set the Simulator Test Set AN/APM-245 prf range selector to INT-MED and adjust the PRF control for a prf meter reading of 1000 pps. Operate the MODE 4 REPLY AM control of Test Set Simulator AN/APM-245 to observe the three-pulse train on the oscilloscope, and adjust the control to obtain a pulse amplitude of 10 volts. Note the pulse width of the Mode 4 reply pulses.

NOTE

Operation of the other Simulator Test Set AN/APM-245 controls is not necessary to provide the Mode 4 reply pubes.

d. Disconnect the oscilloscope preamp input from Simulator Test Set AN/APM-245 and connect it to the MODE 4 REPLY connector on the test set. The pulses viewed must meet the following criteria:

Amplitude	Between 4 volts-and 6 volts
Pulse width	Same as pulse width of the Mode 4 reply pulses from the simulator test set ± 0.05 microsecond
Rise time	0.1 microsecond maximum
Fall time	0.25 microsecond maximum
Negative overshoot	1.5 volts maximum

e. De-energize Simulator Test Set AN/APM-245, remove test set-to-computer cable W11, and set the 6 AMP POWER circuit breaker to OFF.

6-20. CONTINUITY CHECKS.

6-21. Continuity checks are to be performed only on areas of the test set that have been repaired. When performing continuity checks, use the multimeter as an ohmmeter and refer to the schematic diagram (figure 4-4) and the wire run list (figure 4-6).

6-22. ACCESSORY CABLES.

6-23. Continuity checks are to be performed only on repaired cables. When performing continuity checks, use the multimeter as an ohmmeter and refer to the wire run list (figure 4-6).

SECTION VII

SHIPMENT AND LIMITED STORAGE AND DEMOLITION TO PREVENT ENEMY USE

7-1. SHIPMENT AND LIMITED STORAGE.

7-2. DISASSEMBLY OF EQUIPMENT. Prepare the AN/APM-239A for shipment and storage as follows:

a. Ensure that all adjustment screws and snap fasteners are securely tightened.

b. Ensure that pressure cap is fastened in place.

7-3. REPACKING FOR SHIPMENT AND LIMITED STORAGE. The repackaging depends on the materials available and the conditions under which the equipment is to be shipped (paragraph 7-5, below) or stored (paragraph 7-6, below). Adapt the procedures outlined below whenever circumstances permit. The information concerning the original packaging will also be helpful.

7-4. MATERIAL REQUIREMENTS. The materials listed in figure 7-l are required for packaging the AN/APM-239A for shipment. For stock numbers of materials, consult applicable manual.

MATERIAL		QUANTITY
Carton, corrugated	type 1, class II.	36 x 15 x 28 inches
Material, filler,	type 2, class A.	5 lb
Tape, gummed paper		20 feet

Figure 7-1. Materials Required for Packaging

7-5. PACKAGING FOR SHIPMENT. Use the original packing materials if available; if not, proceed as follows:

a. Place all components and accessories in the transit case.

b. Place a layer of filler material on the bottom of the corrugated carton.

c. Cushion the equipment on all outside surfaces with pads of filler material.

d. Place the cushioned equipment within the corrugated carton and add additional filler material as required.

e. Secure the carton with gummed tape.

7-6. PACKAGING FOR LIMITED STORAGE. AN/APM-239A transit case provides adequate protection for its contents and the components are sufficiently sturdy to require no additional protection during limited storage.

7-7. DEMOLITION OF MATERIAL TO PREVENT ENEMY USE.

7-8. AUTHORITY FOR DEMOLITION. The demolition procedures given in paragraph 7-9 will be used to prevent the enemy from using or salvaging this equipment. Demolition of the equipment will be accomplished only upon the order of the commander.

7-9. METHODS OF DESTRUCTION. Any of the methods of destruction given below may be used. The time available and the tactical situation will determine the method to be used when destruction of the equipment is ordered.

7-10. SMASH. Smash the front panel, case, cover, switches, and controls; open the case, remove and smash all circuit boards and other components; use sledges, axes, hammers, crowbars, and any other heavy tool available.

7-11. CUT. Cut the interconnecting cables; use axes, handaxes, machetes, or other similar tools.

WARNING

Be extremely careful with explosives and incendiary devices. Use these items only when the need is urgent.

7-12. BURN. Burn the technical manual first. Burn as much of the equipment as possible; use gasoline, oil, flame throwers, and similar tools. Use incendiary grenades to complete the destruction of unit interiors.

7-13. BEND. Bend panels and cabinets.

7-14. EXPLODE. If explosives are necessary, use firearms, grenades, or TNT.

7-15. DISPOSE. Bury or scatter the destroyed parts in slit trenches or foxholes, or throw them into nearby streams.

APPENDIX A

REFERENCES

Following is a list of applicable references available to the operator and repairman of Test Set, Transponder Set AN/APM-239A:

NAVSUP-2002, section viii (Navy) DA PAM 310-4 and DA PAM 310-7 (Army) T.O. 0-l-12 (Air Force)	Index of Technical Bulletins, Technical Manuals, Technical Orders, Illustrated Parts Breakdown, Supply Bulletins, Supply Manuals, Lubrication Orders, and Modification Work Orders
NAVWEPS Form 13070/5(Navy) TM 38-750 (Army) AFTO Form 29/29A (Air Force)	Equipment Record Procedures
Publication 378 (Navy) AFR 71-4 (Air Force) AR 700-58 (Army)	Report of Packaging and Handling Deficiencies (DD Form 6)
NAVSUP Pub 459 (Navy) AR 55-38 (Army) AFM 75-34 (Air Force)	Discrepancy in Shipment Report (SF 361)
NAWVEPS 16-35C6280-1 (Navy) T.O. 12P4-2APX-142 (Air Force) TM 11-5841-268-25 (Army)	Control, Transponder Set C-6280(P)/APX.
TM 11-5895-217-12, -35 (Army)	Transponder Set AN/APX-44, -44B
NAVAIR 16-30APX64-1, -3 (Navy) T.O. 12P4-2APXM-2 (Air Force)	Radio Receiver - Transmitters RT-727, -728, -731/ APX-64
TM 11-5895-490-20, -35 (Army) NAVSHIPS 0967-217-4010, -4020 (Navy) NAVAIR 16-30APX72-2 (Navy) T.O. 12P4-2APX72-2	Receiver-Transmitter, Radio RT-859/APX-72
NAVAIR 16-35TS1843-1 (Navy) T.O. 12P4-2APX-152 (Air Force)	Test Set, Transponder Set TS-1843/APX
SB38-100 (Army)	Preservation, Packaging and Packing Materials, Supplies, and Equipment Used by the Army.
TB SIG 364 (Army)	Field Instructions for Painting and Preserving Electronics Command Equipment.
TM 9-213 (Army)	Painting Instructions for Field Use.

APPENDIX B

BASIC ISSUE ITEMS

Section I. INTRODUCTION

B-1. General

This appendix lists items for Test Set, Transponder Set AN/APM-239A, the component items comprising it, and the items which accompany it, or are required for installation, operation, or operator's maintenance.

B-2. Explanation of Columns

An explanation of the columns in Section II is given below.

a. Source, Maintenance, and Recoverability Codes (Col. 1).

(1) Source code, Column 1a. The selection status and source for the listed item is noted here, The source code used is:

Code	Explanation
P	applies to repair parts which are stocked in or supplied from the GSA/DSA, or Army supply system, and authorized for use at indicated maintenance categories.
A	applies to assemblies that are not procured or stocked as such but are made up of two or more units, each of which carry individual stock numbers and descriptions and are procured and stocked and can be assembled by units at indicated maintenance categories.

(2) Maintenance code, Column 1b. The lowest category of maintenance authorized to install the listed item is noted here. The maintenance code used is as follows:

Code	Explanation
O	Organizational Maintenance
H	General Support Maintenance

(3) Recoverability code, Column 1c. The information in this column indicates whether unserviceable items should be returned for recovery or salvage. Recoverability codes and their explanations are as follows:

NOTE

When there is no code indicated in the recoverability column, the part will be considered expendable.

Code	Explanation
R	applies to repair parts and assemblies that are economically repairable at DSU and GSU activities and normally are furnished by supply on an exchange basis.

b. Federal Stock Number, Column 2. The Federal stock number for the item is indicated in this column.

c. Description, Column 3. The Federal item name, a five digit manufacturer's code, part number, and when required, model designators, which indicate different models of the end equipment, are included in this column.

d. Unit of Issue, Column 4. The unit used as a basis of issue, e.g., ea, pr, ft, yd, etc., is noted in this column.

e. Quantity Incorporated in Unit, Column 6. The total quantity of the item used in the equipment is given in this column.

f. Quantity Authorized, Column 7. The total quantity of an item required to be on hand and necessary for the operation and maintenance of the equipment is given in this column.

g. Illustration, Column 8.

(1) Figure number, Column 8a. The number of the illustration in which the item is shown in Technical Manual TM 11-6625-842-15 is indicated in this column. Refer only to those illustrations contained in the narrative and parts lists manuals on the same item of equipment as covered by this manual; that is, manuals with the same serial and FSC number.

(2) Item number, Column 8b. The callout number used to reference the item in the illustration appears in this column.

B-3. Federal Supply Codes

This paragraph lists the Federal supply code with the associated manufacturer's name.

Code	Manufacturer
70276	Allen Mfg. Co.
80058	Joint Electronic Type Designation System
80249	Hazeltine Corp.
81349	Military Specifications

SECTION II

BASIC ISSUE ITEMS LIST

SOURCE CD	MAINT. CD	REC. CODE	BASIC ISSUE ITEMS LIST: FEDERAL STOCK NUMBER	MODEL 1	MODEL 2	MODEL 3	MODEL 4	MODEL 5	MODEL 6	DESCRIPTION	UNIT OF ISSUE	QTY INC IN UNIT PACK	QTY INC IN UNIT	QTY AUTH	ILLUSTRATIONS: FIGURE NUMBER	ILLUSTRATIONS: ITEM OR SYMBOL NO.
A	H	R								TEST SET, TRANSPONDER SET AN/APM-239A: 80249; 119598-1						
P	H	R								TEST SET, TRANSPONDER SET TS-2681/APM-239A: 80249; 119066-1	EA		1	1	5-1	1
P	H	R								CASE, TEST SET CY-6477/APM-239A: 80249; 360087	EA		1	1	5-1	
A	H	R								CONTROL, TRANSPONDER SET: 80058; C-6280A(P)/APX	EA		1	1	5-1	13
										TECHNICAL MANUAL: TM 11-6625-842-15	EA		1	2		
P	H									ADAPTER, CONNECTOR: 81349; UG-201/U	EA		1	1	5-1	42
P	H									ADAPTER, CONNECTOR: 81349; UG-636A/U	EA		1	1	5-1	41
P	O									ADAPTER, TEST MX-8203/APM-239A: 80249; 119165-2	EA		1	1	5-1	18
P	O									ADAPTER, TEST MX-8207/APM-239A: 80249; 119198-2	EA		1	1	5-1	19
P	O									ADAPTER, TEST MX-8202/APM-239A: 80249; 119165-1	EA		1	1	5-1	20
P	O									ADAPTER, TEST MX-8205/APM-239A: 80249; 119165-4	EA		1	1	5-1	21
P	O									ADAPTER, TEST MX-8206/APM-239A: 80249; 119198-1	EA		1	1	5-1	22
P	O									ADAPTER, TEST MX-8204/APM-239A: 80249; 119165-3	EA		1	1	5-1	23

SOURCE CD	MAINT. CD	REC. CODE	FEDERAL STOCK NUMBER	MODEL 1	MODEL 2	MODEL 3	MODEL 4	MODEL 5	MODEL 6	DESCRIPTION	UNIT OF ISSUE	QTY INC IN UNIT PACK	QTY INC IN UNIT	QTY AUTH	ILLUSTRATIONS FIGURE NUMBER	ILLUSTRATIONS ITEM OR SYMBOL NO.
										BASIC ISSUE ITEMS LIST						
A	H	R								CABLE ASSEMBLY, POWER, ELECTRICAL CX-10926/APM-239A: 80249; 119058-1	EA		1	1	5-1	7
A	H	R								CABLE ASSEMBLY, RADIO FREQUENCY CG-3470/APM-239A: 80249; 119162-1	EA		1	1	5-1	45
A	H	R								CABLE ASSEMBLY, SPECIAL PURPOSE, ELECTRICAL CX-11734/APM-239A: 80249; 119163-1	EA		1	1	5-1	45
P	O									FUSE, CARTRIDGE: 81349; FO2A250V1/2A	EA		1	1	5-1	5
P	O									FUSE, CARTRIDGE: 81349; FO2A250V2A	EA		1	1	5-1	6
P	O									FUSE, CARTRIDGE: 81349; FO3A250V10A	EA		1	1	5-1	4
P	O									PULLER, PRINTED CIRCUIT BOARD: 80249; 880007	EA		1	1	5-1	46
P	O									REMOVAL TOOL, CONNECTOR: 80249; 880177	EA		1	1	5-1	33
										The following items and their quantities are mounted in or on equipment listed for storage purposes:						
										TEST SET, TRANSPONDER SET AN/APM-239A						
P	H									ADAPTER, CONNECTOR: 81349; UG-201/U	EA		1	1	5-1	42
P	H									ADAPTER, CONNECTOR: 81349; UG-636A/U	EA		1	1	5-1	41
P	O									ADAPTER, TEST MX-8203/APM-239A: 80249; 119165-2	EA		1	1	5-1	18

SOURCE CD	MAINT. CD	REC. CODE	FEDERAL STOCK NUMBER	MODEL 1	MODEL 2	MODEL 3	MODEL 4	MODEL 5	MODEL 6	DESCRIPTION	UNIT OF ISSUE	QTY INC IN UNIT PACK	QTY INC IN UNIT	QTY AUTH	ILLUSTRATIONS FIGURE NUMBER	ILLUSTRATIONS ITEM OR SYMBOL NO.
										BASIC ISSUE ITEMS LIST						
P	O									ADAPTER, TEST MX-8207/APM-239A: 80249; 119198-2	EA		1	1	5-1	19
P	O									ADAPTER, TEST MX-8202/APM-239A: 80249; 119165-1	EA		1	1	5-1	20
P	O									ADAPTER, TEST MX-8205/APM-239A: 80249; 119165-4	EA		1	1	5-1	21
P	O									ADAPTER, TEST MX-8206/APM-239A: 80249; 119198-1	EA		1	1	5-1	22
P	O									ADAPTER, TEST MX-8204/APM-239A: 80249; 119165-3	EA		1	1	5-1	23
A	H	R								CABLE ASSEMBLY, POWER, ELECTRICAL CX-10926/APM-239A: 80249; 119058-1	EA		1	1	5-1	45
A	H	R								CABLE ASSEMBLY, RADIO FREQUENCY CG-3470/APM-239A: 80249; 119162-1	EA		1	1	5-1	45
A	H	R								CABLE ASSEMBLY, SPECIAL PURPOSE, ELECTRICAL CX-10909/APM-239A: 80249; 119077-1	EA		1	1	5-1	45
A	H	R								CABLE ASSEMBLY, SPECIAL PURPOSE, ELECTRICAL CX-10907/APM-239A: 80249; 119078-1	EA		1	1	5-1	45
A	H	R								CABLE ASSEMBLY, SPECIAL PURPOSE, ELECTRICAL CX-10910/APM-239A: 80249; 119079-1	EA		1	1	5-1	45
A	H	R								CABLE ASSEMBLY, SPECIAL PURPOSE, ELECTRICAL CX-10908/APM-239A: 80249; 119076-1	EA		1	1	5-1	45

SOURCE CD	MAINT. CD	REC. CODE	FEDERAL STOCK NUMBER	MODEL 1	MODEL 2	MODEL 3	MODEL 4	MODEL 5	MODEL 6	DESCRIPTION	UNIT OF ISSUE	QTY INC IN UNIT PACK	QTY INC IN UNIT	QTY AUTH	ILLUSTRATIONS FIGURE NUMBER	ILLUSTRATIONS ITEM OR SYMBOL NO.
			BASIC ISSUE ITEMS LIST													
A	H	R								CABLE ASSEMBLY, SPECIAL PURPOSE, ELECTRICAL CX-10909/APM-239A: 80249; 119077-1	EA		1	1	5-1	45
A	H	R								CABLE ASSEMBLY, SPECIAL PURPOSE, ELECTRICAL CX-10907/APM-239A: 80249; 119078-1	EA		1	1	5-1	45
A	H	R								CABLE ASSEMBLY, SPECIAL PURPOSE, ELECTRICAL CX-10910/APM-239A: 80249; 119079-1	EA		1	1	5-1	45
A	H	R								CABLE ASSEMBLY, SPECIAL PURPOSE, ELECTRICAL CX-10908/APM-239A: 80249; 119076-1	EA		1	1	5-1	45
A	H	R								CABLE ASSEMBLY, SPECIAL PURPOSE, ELECTRICAL CX-11734/APM-239A: 80249; 119163-1	EA		1	1	5-1	45
P	O	R								CABLE ASSEMBLY, SPECIAL PURPOSE, ELECTRICAL CX-10905/APM-239A; 80249; 119073-1	EA		1	1	5-1	45
A	H	R								CABLE ASSEMBLY, SPECIAL PURPOSE, ELECTRICAL CX-11735/APM-239A: 80249; 119163-2	EA		1	1	5-1	45
P	O									PULLER, PRINTED CIRCUIT BOARD: 80249; 880007	EA		1	1	5-1	46
P	O									REMOVAL TOOL, CONNECTOR: 80249; 880177	EA		1	1	5-1	33

SOURCE CD	MAINT. CD	REC. CODE	FEDERAL STOCK NUMBER	BASIC ISSUE ITEMS LIST: MODEL 1	2	3	4	5	6	DESCRIPTION	UNIT OF ISSUE	QTY INC IN UNIT PACK	QTY INC IN UNIT	QTY AUTH	ILLUSTRATIONS: FIGURE NUMBER	ITEM OR SYMBOL NO.
										ACCESSORY, TOOLS AND TEST EQUIPMENT						
X2	H									KEY, SOCKET HEAD SCREW: 70276; 332F4	EA		1	1	5-1	3
X2	H									KEY, SOCKET HEAD SCREW: 70276; 564F4	EA		1	1	5-1	2
P	O		[redacted]							PULLER, PRINTED CIRCUIT BOARDS: 80249; 880007	EA		1	1	5-1	46
P	O									REMOVAL TOOL, CONNECTOR: 80249; 880177	EA		1	1	5-1	33

APPENDIX C

MAINTENANCE ALLOCATION

Section I. INTRODUCTION

C-1. General

This appendix provides a summary of the maintenance operations covered in the equipment literature for Test Set, Transponder Set AN/APM-239A. It authorizes levels of maintenance for specific maintenance functions on repairable items and components and the tools and equipment required to perform each function. This appendix may be used as an aid in planning maintenance operations.

C-2. Explanation of Format for Maintenance Allocation Chart

a. Group Number. Group numbers correspond to the reference designation prefix assigned in accordance with ASA Y32.16 (Electrical and Electronics Reference Designations). They indicate the relation of listed items to the next higher assembly.

b. Component Assembly Nomenclature. This column lists the item names of component units, assemblies, subassemblies, and modules on which maintenance is authorized.

c. Maintenance Function. This column indicates the maintenance levels at which performance of the specific maintenance function is authorized. Authorization to perform a function at any level also includes authorization to perform that function at higher levels. The numbers used represent the various maintenance levels as follows:

Number	Maintenance Category
C	Operator/Crew
O	Organizational
F	Direct support
H	General support
D	Depot

d. Tools and Equipment. The numbers appearing in this column refer to specific tools and equipment which are identified by these numbers in section III.

e. Remarks. Self-explanatory.

C-3. Explanation of Format for Tool and Test Equipment Requirements

The columns in the tool and test equipment requirements chart are as follows:

a. Tools and Equipment. The numbers in this column coincide with the numbers used in the tools and equipment column of the MAC. The numbers indicate the applicable tool for the maintenance function.

b. Maintenance Category. The numbers in this column indicate the maintenance level normally allocated the facility.

c. Nomenclature. This column lists tools, test, and maintenance equipment required to perform the maintenance functions.

d. Federal Stock Number. This column lists the Federal stock number.

e. Tool Number. Not used.

SECTION II - MAINTENANCE ASSIGNMENT

GROUP NUMBER	COMPONENT ASSEMBLY NOMENCLATURE	MAINTENANCE FUNCTION											TOOLS AND EQUIPMENT	REMARKS
		Inspect	Test	Service	Adjust	Align	Calibrate	Install	Replace	Repair	Overhaul	Rebuild		
A	Test Set, Transponder Set AN/APM-239A	0	0						0			D	1 4 1, 2, 3, 5, 6, 7, 8	Visual inspection. Operation. Black box.
1A	Test Set, Transponder Set TS-2681/APM-239A	0	0 H				H		0	H	D		1 4 1, 2, 3, 6, 7, 8 1, 6 5 1, 2, 3, 5, 6, 7, 8	Visual inspection. Operation. Black box. Operation. Voltage. Piece parts.
1A1	Control, Transponder Set C-6280(P)/APX or C-6280A(P)/APX	0							0					Visual inspection. See MAC in TM 11-5841-268-25.
2A	Case, Test Set CY-6477/APM-239A	0							0				4	Visual inspection. Black box.
	Used with items													
2A1	Interconnecting cable (W1) to RT-859/APX-72	0	0 H						0	H			1 1 5	Visual inspection. Continuity check. Cable. Continuity check. Piece part.
2A2	Power cable (W3)	0	0 H						0	H			1 1 5	Visual inspection. Continuity check. Cable. Continuity check. Piece part.

SECTION II - MAINTENANCE ASSIGNMENT (CONT)

GROUP NUMBER	COMPONENT ASSEMBLY NOMENCLATURE	MAINTENANCE FUNCTION											TOOLS AND EQUIPMENT	REMARKS
		INSPECT	TEST	SERVICE	ADJUST	ALIGN	CALIBRATE	INSTALL	REPLACE	REPAIR	OVERHAUL	REBUILD		
	Used with items (Cont)													
2A3	Interconnecting cable (W11) to KIT-1A/TSEC	0												Visual inspection.
			0										1	Continuity check.
									0					Cable.
			H										1	Continuity check.
										H			5	Piece part.
2A4	Interconnecting cable (W12) to TS-1843/APX	0												Visual inspection.
			0										1	Continuity check.
									0					Cable.
			H										1	Continuity check.
										H			5	Piece part.
2A5	Interconnecting cable (W13) to RT-494/APX-44	0												Visual inspection.
			0										1	Continuity check.
									0					Cable.
			H										1	Continuity check.
										H			5	Piece part.
2A6	Interconnecting cable (W14) to C-2714/APX-44	0												Visual inspection.
			0										1	Continuity check.
									0					Cable.
			H										1	Continuity check.
										H			5	Piece part.
2A7	Video jumper cable (W17)	0												Visual inspection.
			0										1	Continuity check.
									0					Cable.
			H										1	Continuity check.
										H			5	Piece part.
2A8	Rf section jumper cable (W18)	0												Visual inspection.
			0										1	Continuity check.
									0					Cable.
			H										1	Continuity check.
										H			5	Piece part.

SECTION II - MAINTENANCE ASSIGNMENT (CONT)

GROUP NUMBER	COMPONENT ASSEMBLY NOMENCLATURE	MAINTENANCE FUNCTION											TOOLS AND EQUIPMENT	REMARKS
		INSPECT	TEST	SERVICE	ADJUST	ALIGN	CALIBRATE	INSTALL	REPLACE	REPAIR	OVERHAUL	REBUILD		
	Used with items (Cont)													
2A9	Power supply jumper cable (W19)	0												Visual inspection.
			0										1	Continuity check.
									0					Cable.
			H										1	Continuity check.
										H			5	Piece part.
2A10	Extender boards (A1-A6)	0												Visual inspection.
			0										1	Continuity check.
									0					Board.
2A11	Coaxial adapter UG-201A U	0												Visual inspection.
			0										1	Continuty Check
									0					Adapter.
2A12	Coaxial adapter UG-636A U	0												Visual inspection.
			0										1	Continuity Check
									0					Adapter.

SECTION III - TOOL AND TEST EQUIPMENT REQUIREMENTS

TOOL OR TEST EQUIPMENT REFERENCE CODE	MAINTENANCE CATEGORY	NOMENCLATURE	FSN	TOOL NUMBER
1	O, H, D	Multimeter AN/USM-223	6625-999-7465	*
2	H, D	Test Set, Simulator, Transponder AN/APM-245		
3	H, D	Oscilloscope AN/USM-140B	6625-987-6603	
4	O	Tool Kit TK-101/G	5180-064-5178	
5	H, D	Tool Kit TK-105/G	5180-610-8177	
6	H, D	Voltmeter, Electronic ME-202( )/U	6625-709-0288	
7	H, D	Ammeter ME-65( )/U	6625-752-8817	
8	H, D	Multimeter ME-87( )/U	6625-223-5248	
		* Use AN/URM-105 at 0 and TE-352B/U at H, D until AN/USM-223 is available.		

TEAR ALONG PERFORATED LINE

RECOMMENDED CHANGES TO EQUIPMENT TECHNICAL PUBLICATIONS

SOMETHING WRONG WITH THIS PUBLICATION?

FROM: (PRINT YOUR UNIT'S COMPLETE ADDRESS)

DATE SENT

PUBLICATION NUMBER	PUBLICATION DATE	PUBLICATION TITLE

BE EXACT. . .PIN-POINT WHERE IT IS

PAGE NO.	PARA-GRAPH	FIGURE NO	TABLE NO.

IN THIS SPACE TELL WHAT IS WRONG AND WHAT SHOULD BE DONE ABOUT IT:

PRINTED NAME, GRADE OR TITLE, AND TELEPHONE NUMBER

SIGN HERE:

DA FORM 1 JUL 79 2028-2

PREVIOUS EDITIONS ARE OBSOLETE.

P.S.—IF YOUR OUTFIT WANTS TO KNOW ABOUT YOUR RECOMMENDATION MAKE A CARBON COPY OF THIS AND GIVE IT TO YOUR HEADQUARTERS.

This fine document...

Was brought to you by me:

Liberated Manuals -- free army and government manuals

Why do I do it? I am tired of sleazy CD-ROM sellers, who take publicly available information, slap “watermarks” and other junk on it, and sell it. Those masters of search engine manipulation make sure that their sites that sell free information, come up first in search engines. They did not create it... They did not even scan it... Why should they get your money? Why are not letting you give those free manuals to your friends?

I am setting this document FREE. This document was made by the US Government and is NOT protected by Copyright. Feel free to share, republish, sell and so on.

I am not asking you for donations, fees or handouts. If you can, please provide a link to liberatedmanuals.com, so that free manuals come up first in search engines:

<A HREF=http://www.liberatedmanuals.com/>Free Military and Government Manuals</A>

- Sincerely
  Igor Chudov
  http://igor.chudov.com/
- Chicago Machinery Movers